Washer-Extractor

Refer to Page 3 for Model Numbers

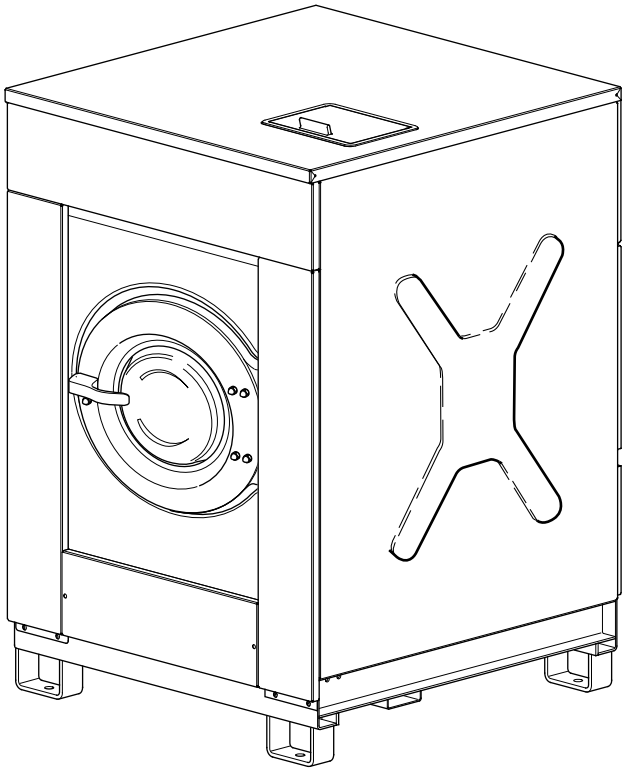

CFD22C_D0341

Parts

Alliance Laundry Systems

www.alliancelaundry.com

Part No. D0341R4
October 2013

Table of Contents

Title	Page
Parts Ordering Information	2
Nameplate Location	2
Model Identification	3
Cabinet Freestanding Washer-Extractor Product Overview	4
Base and Shock Absorber	6
Shell	8
Bearing Housing	10
Basket, Pulley and Belt	12
Motor	14
Drain Plumbing - Single Drain	16
Drain Plumbing - Dual Drain	18
Drain Valve - Normally Open	20
Drain Valve - Normally Closed	22
Door Lock	24
Door	26
Door Handle	28
Control Module - PC30	30
Electrical Component Mounting Plate - Models with KEB Inverter Drive	32
Electrical Component Mounting Plate - Models with Mitsubishi Inverter Drive	34
Inverter Drive	36
Main Switch and Printboard	38
Left Side, Front and Top Panels	40
Right Side and Rear Panels	42
Upper Back Panel - Models with KEB Inverter Drive	44
Upper Back Panel (Drawing 1 of 2)	46
Upper Back Panel (Drawing 2 of 2)	48
Water Inlet Valves	50
Supply Dispenser Plumbing - Models with Mueller Valves	52
Supply Dispenser Plumbing - Models with Dhnfoss Valves	54
Overflow and Inlet Plumbing	56
Supply Dispenser	58
Liquid Supply Pump - Through Supply Dispenser	60
Liquid Supply Pump - Through Door Glass	62
Electric and Steam Heating Options	64
Balance Switch	66
Parts Index	69

© Copyright 2013, Alliance Laundry Systems LLC

All rights reserved. No part of the contents of this book may be reproduced or transmitted in any form or by any means without the expressed written consent of the publisher.

Parts Ordering Information

If literature or replacement parts are required, contact the source from whom the machine was purchased or contact Alliance Laundry Systems at (920) 748-3950 for the name and address of the nearest authorized parts distributor.

For technical assistance, call either of the numbers listed below:

(920) 748-3121 Ripon, Wisconsin

+32 56 41 20 54 Wevelgem, Belgium

Nameplate Location

When calling or writing about your product, be sure to mention model and serial numbers. Model and serial numbers are located on nameplate(s) as shown.

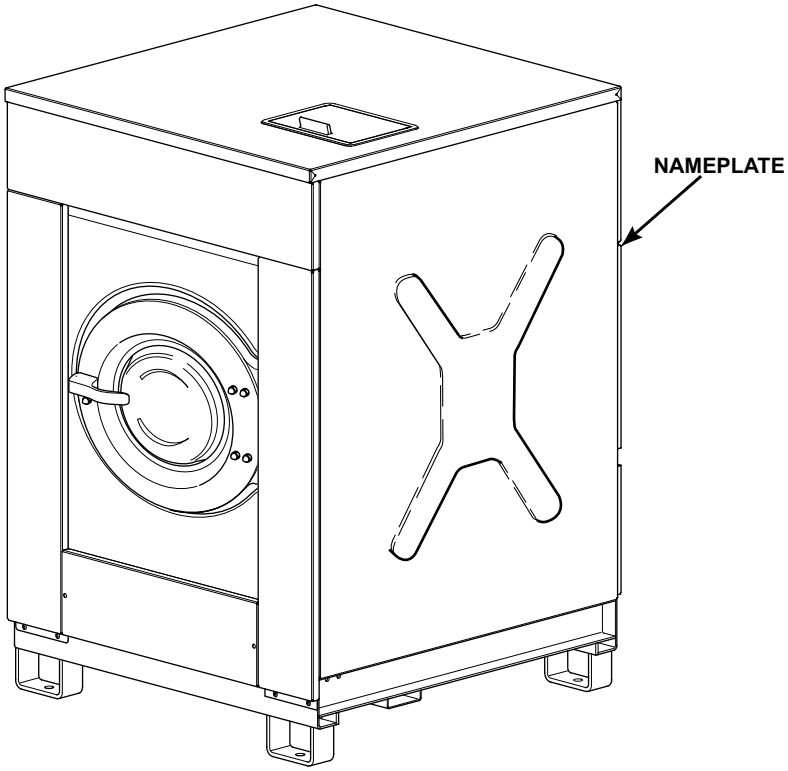

CFD22CA_D0341

© Copyright, Alliance Laundry Systems LLC – DO NOT COPY or TRANSMIT

Model Identification

Information in this manual is applicable to these washer-extractor models:

HF450_PC30	HF570_PC30
HF450_PS40	HF570_PS40
HF450_PS40F	HF570_PS40F

© Copyright, Alliance Laundry Systems LLC – DO NOT COPY or TRANSMIT

Cabinet Freestanding Washer-Extractor Product Overview

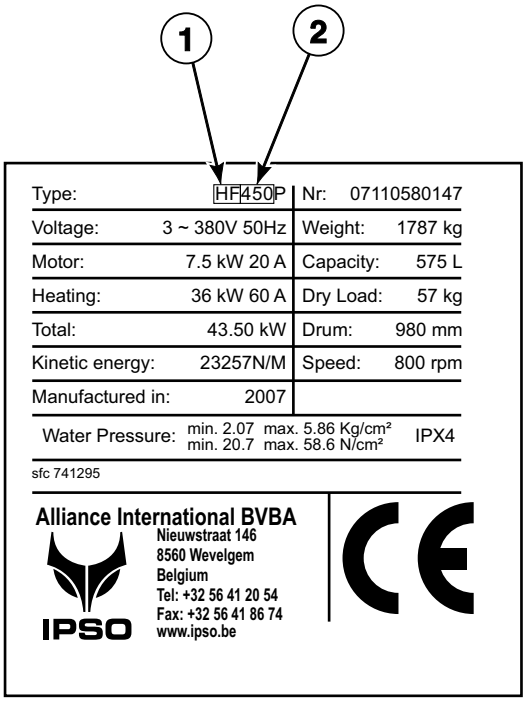

Label 1

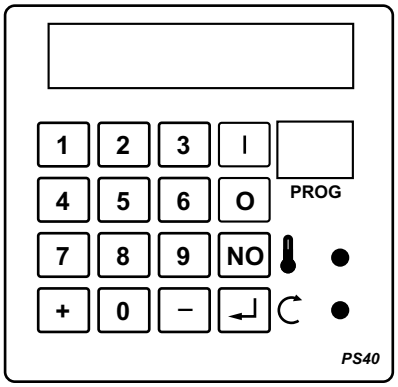

PS40

CFD304P_D0341

© Copyright, Alliance Laundry Systems LLC – DO NOT COPY or TRANSMIT

Cabinet Freestanding Washer-Extractor Product Overview

REF	PART NO.	DESCRIPTION	COMMENTS
1	-	Product Family	HF
2	-	Capacity	450 570

© Copyright, Alliance Laundry Systems LLC – DO NOT COPY or TRANSMIT

Base and Shock Absorber

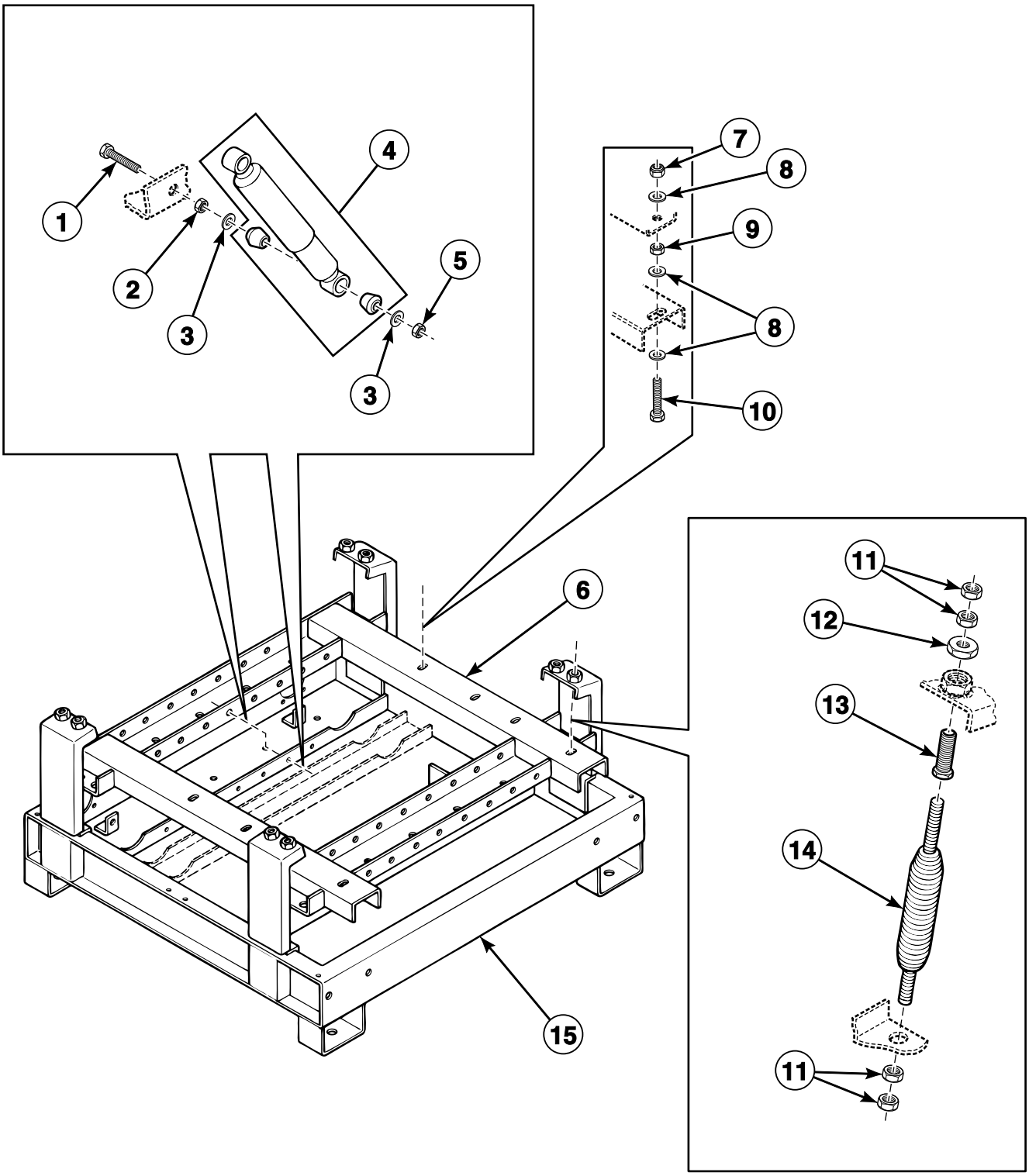

BE000051P_D0341

© Copyright, Alliance Laundry Systems LLC – DO NOT COPY or TRANSMIT

Base and Shock Absorber

REF	PART NO.	DESCRIPTION	COMMENTS
1	206/00045/00	Bolt	
2	204/00001/00	Nut	
3	201/00013/00	Washer	
4	247/00008/00	Shock Absorber	
5	204/00112/00	Nut	
6	153/00011/00	Tub Support	HF450 models
	153/00012/00	Tub Support	HF570 models
7	204/00113/00	Nut	
8	201/00001/00	Washer	
9	204/00019/00	Nut	
10	206/00070/00	Bolt	
11	204/00012/00	Nut	
12	204/00016/00	Nut	
13	224/00046/00	Bolt	
14	B12456301	Suspension Spring	
15	153/00009/00	Frame	HF450 models
	153/00010/00	Frame	HF570 models

© Copyright, Alliance Laundry Systems LLC – DO NOT COPY or TRANSMIT

Shell

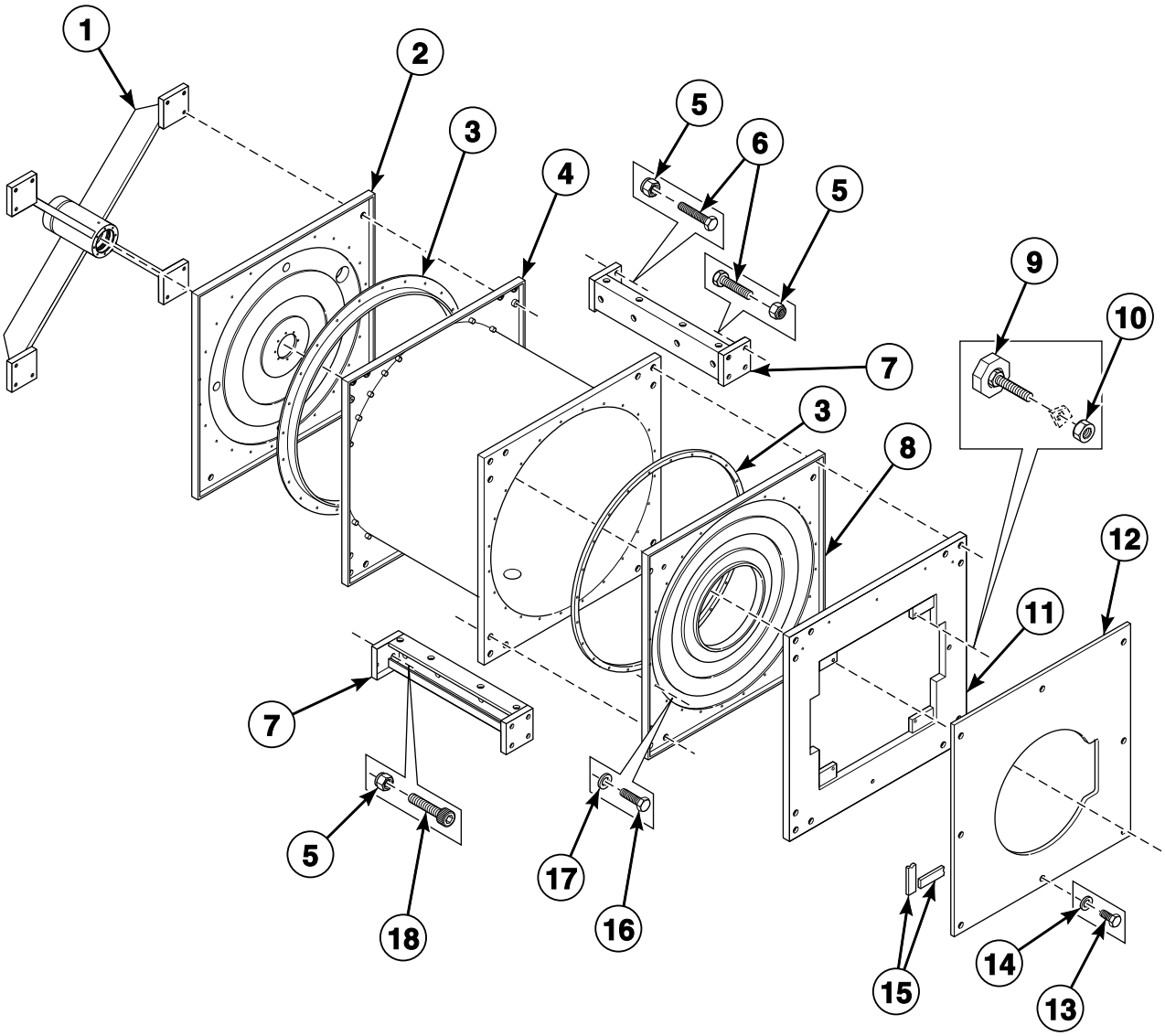

BE000052P_D0341

© Copyright, Alliance Laundry Systems LLC – DO NOT COPY or TRANSMIT

Shell

REF	PART NO.	DESCRIPTION	COMMENTS
1	253/00002/00	Bearing Housing	
2	153/00014/00	Back Panel	
3	223/00168/00	Tub Gasket	
4	153/00019/00	Tub	HF450 models
	153/00020/00	Tub	HF570 models
5	204/00113/00	Nut	
6	206/00122/00	Bolt	
7	153/00022/00	Tub Support	HF450 models
	153/00023/00	Tub Support	HF570 models
8	153/00013/00	Front Panel	
9	252/00006/00	Leveling Leg	
10	204/00003/00	Nut	
11	153/00004/00	Counterweight	
12	153/00101/00	Front Panel Plate	
13	205/00102/00	Bolt	
14	202/00105/00	Washer	
15	246/00092/00	Gasket	
16	205/00105/00	Bolt	
17	202/00110/00	Washer	
18	206/00125/00	Screw	

© Copyright, Alliance Laundry Systems LLC – DO NOT COPY or TRANSMIT

Bearing Housing

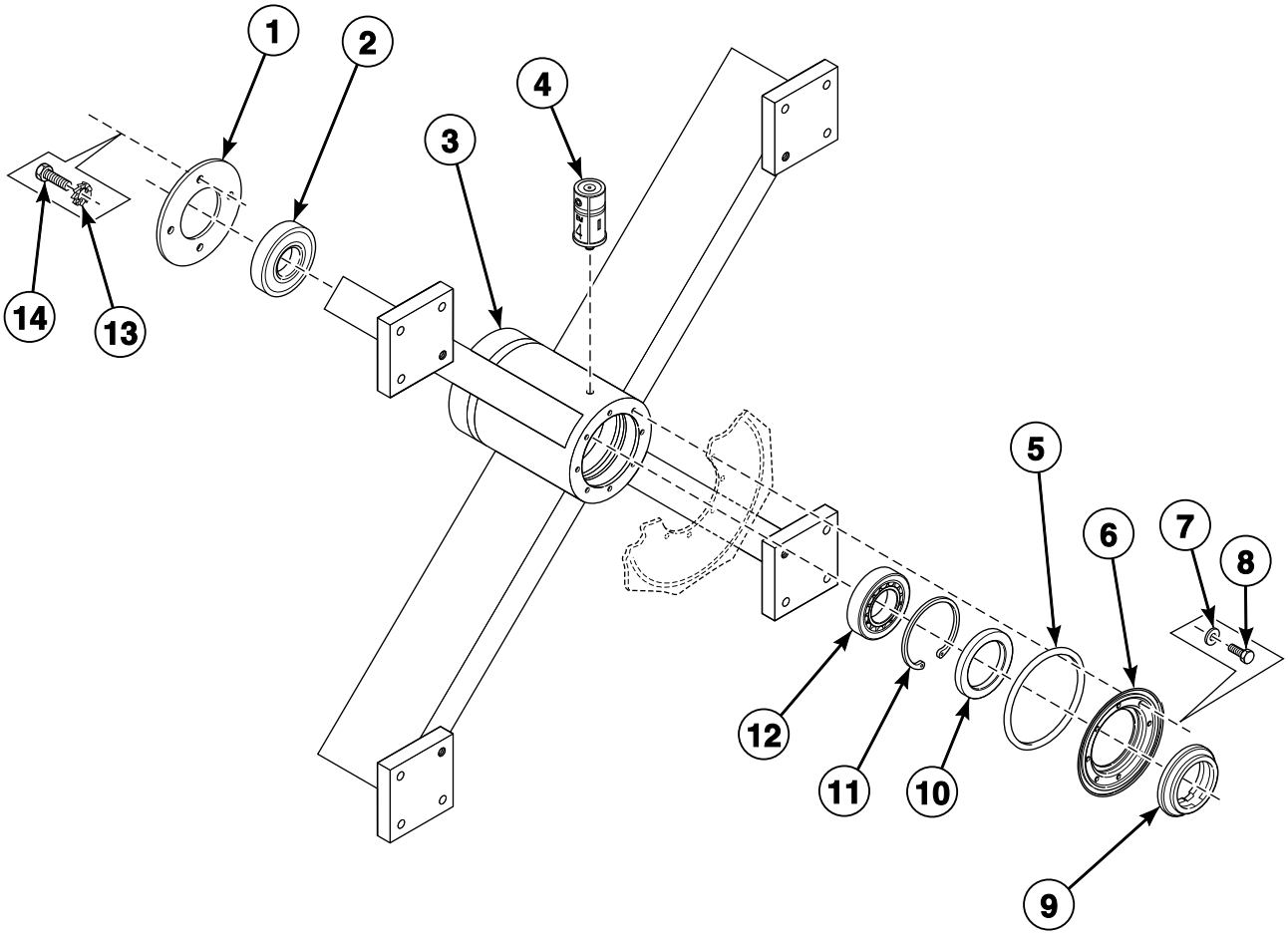

BE000053AP_D0341

© Copyright, Alliance Laundry Systems LLC – DO NOT COPY or TRANSMIT

Bearing Housing

REF	PART NO.	DESCRIPTION	COMMENTS
1	153/00041/00	Bearing Cover Plate	
2	212/00004/00	Ball Bearing	
3	253/00002/00	Bearing Housing	
4	212/00002/00	Lubricator	
5	231/00036/00	O-Ring	
6	131/00035/00	Seal Cover Plate	
7	201/00202/00	Washer	
8	205/00104/00	Bolt	
9	231/00037/00	Shaft Seal	
10	253/00009/00	Grease Ring	
11	253/00008/00	Cerclips	
12	253/00007/00	Bearing	
13	203/00002/00	Washer	
14	206/00006/00	Bolt	

© Copyright, Alliance Laundry Systems LLC – DO NOT COPY or TRANSMIT

Basket, Pulley and Belt

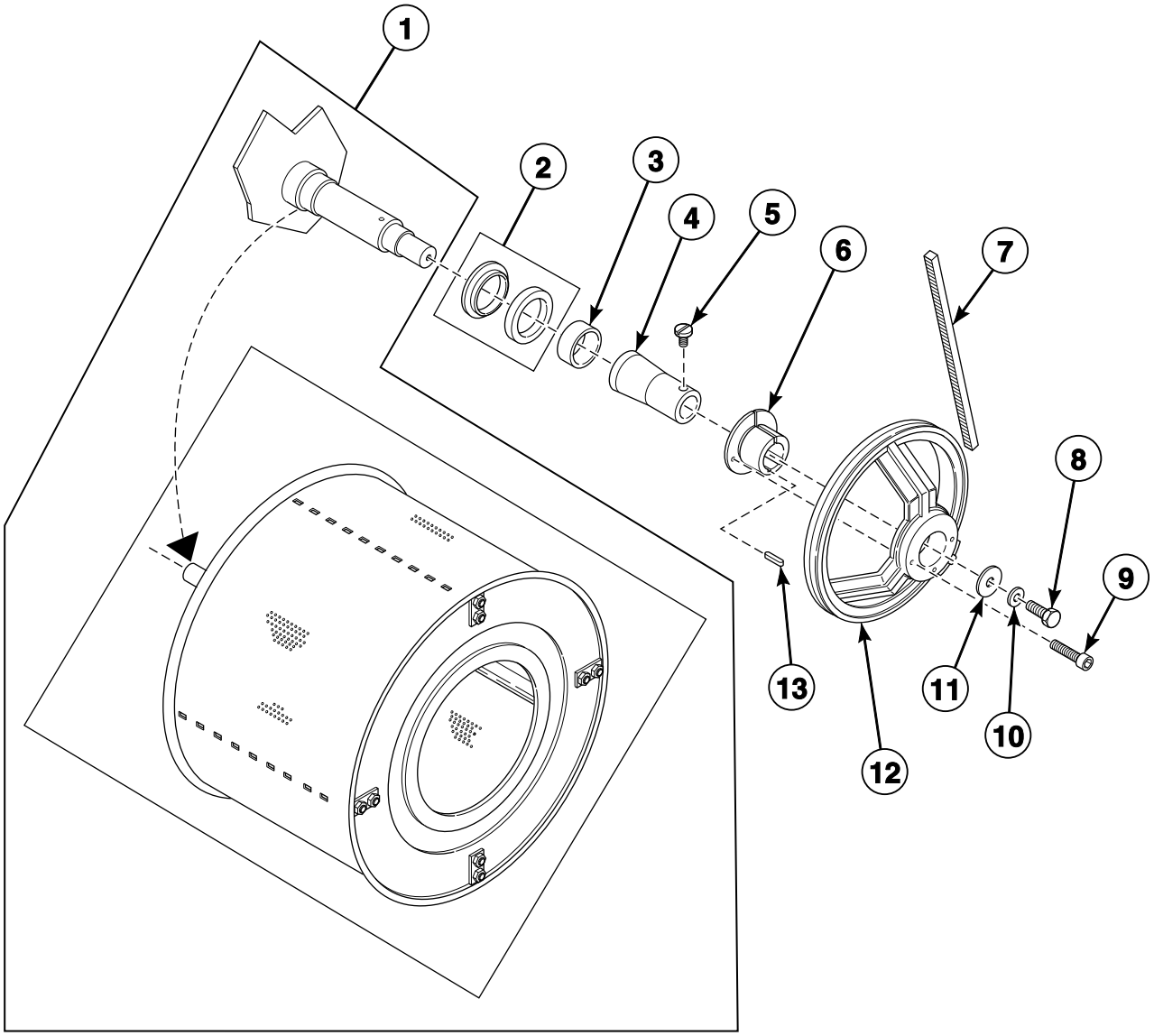

BE000054P_D0341

© Copyright, Alliance Laundry Systems LLC – DO NOT COPY or TRANSMIT

Basket, Pulley and Belt

REF	PART NO.	DESCRIPTION	COMMENTS
1	153/00035/00	Drum and Axle	HF450 models
	153/00036/00	Drum and Axle	HF570 models
2	232/00008/00	Counter Ring	
3	253/00007/00	Bearing	
4	153/00005/00	Pipe	
5	207/00110/00	Screw	
6	212/00009/01	Pulley Hub	
7	253/00010/00	V-Belt	2280 mm long; Used with 253/00013/00 Pulley and B12511401 Motor
	226/00116/00	V-Belt	2300 mm long; Used with 253/00024/00 Pulley and 227/00132/00 Motor
8	206/00004/00	Bolt	
9	212/00009/02	Bolt	
10	203/00001/00	Washer	
11	201/00011/00	Washer	
12	226/00090/00	Pulley	
	253/00026/01	Pulley	Includes clamping bushing
13	212/00026/00	Key	

© Copyright, Alliance Laundry Systems LLC – DO NOT COPY or TRANSMIT

Motor

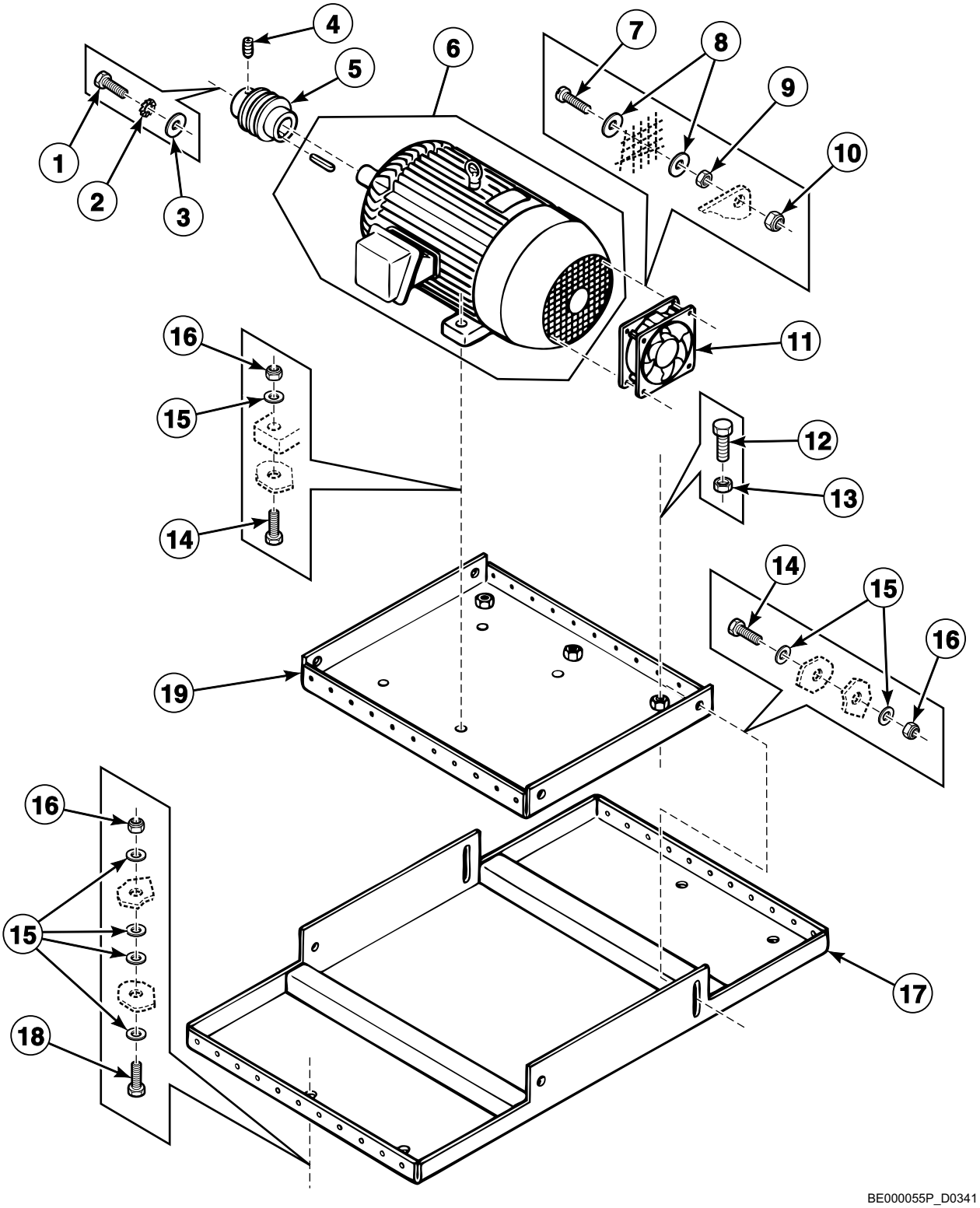

© Copyright, Alliance Laundry Systems LLC – DO NOT COPY or TRANSMIT

Motor

REF	PART NO.	DESCRIPTION	COMMENTS
1	206/00004/00	Bolt	
2	203/00001/00	Washer	
3	201/00011/00	Washer	
4	206/00031/00	Screw	
5	253/00013/00	Pulley	Used with 253/00010/00 Belt and B12511401 Motor
	253/00024/00	Pulley	Used with 226/00116/00 Belt and 227/00132/00 Motor
6	B12511401	Motor	Used with 253/00010/00 Belt and 253/00013/00 Pulley
	227/00132/00	Motor	Used with 226/00116/00 Belt and 253/00024/00 Pulley
7	207/00003/00	Screw	
8	201/00008/00	Washer	
9	204/00007/00	Nut	
10	204/00114/00	Nut	
11	209/00287/00	Cooling Fan	
12	206/00122/00	Bolt	
13	204/00012/00	Nut	
14	248/00114/00	Bolt	
15	201/00001/00	Washer	
16	204/00113/00	Nut	
17	153/00024/00	Motor Plate	
18	206/00072/00	Bolt	
19	153/00025/00	Motor Plate	

© Copyright, Alliance Laundry Systems LLC – DO NOT COPY or TRANSMIT

Drain Plumbing - Single Drain

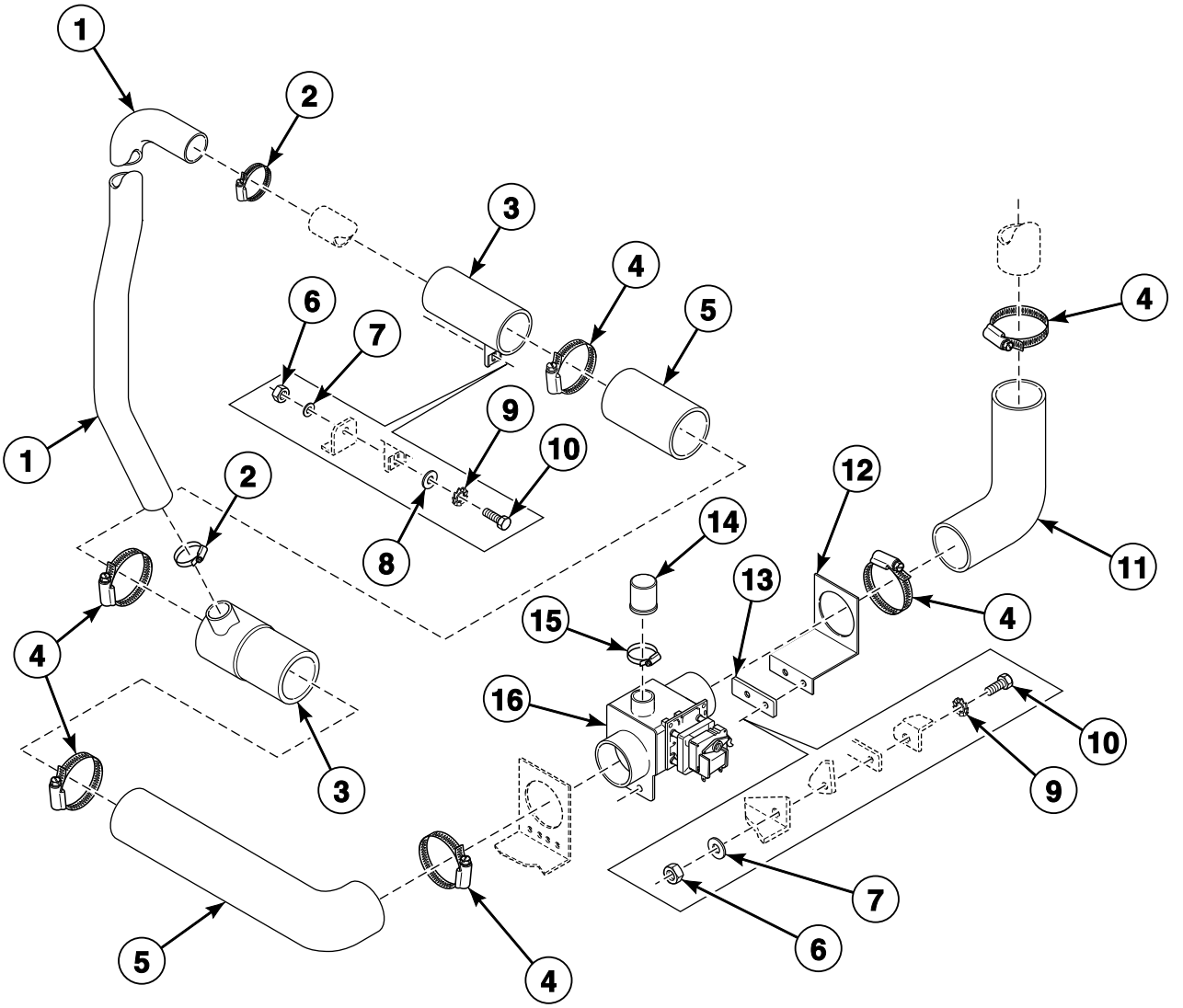

© Copyright, Alliance Laundry Systems LLC – DO NOT COPY or TRANSMIT

Drain Plumbing - Single Drain

REF	PART NO.	DESCRIPTION	COMMENTS
1	223/00184/00	Overflow Hose	
2	223/00013/00	Hose Clamp	
3	223/00106/00	Drain Pipe	
4	223/00071/00	Hose Clamp	
5	223/00141/00	Drain Valve to Drain Pipe Hose	
6	204/00004/00	Nut	
7	202/00002/00	Washer	
8	201/00010/00	Washer	
9	203/00003/00	Washer	
10	206/00009/00	Bolt	
11	223/00133/00	Drain Tub to Drain Valve Hose	
12	115/00147/00	Drain Valve Plate Assembly	
13	115/00147/01	Drain Valve Plate Assembly	
14	223/00086/00	Drain Valve Overflow Plug	
15	223/00012/00	Hose Clamp	
16	209/00075/00	Drain Valve	NO
	209/00171/00	Drain Valve	NC

© Copyright, Alliance Laundry Systems LLC – DO NOT COPY or TRANSMIT

Drain Plumbing - Dual Drain

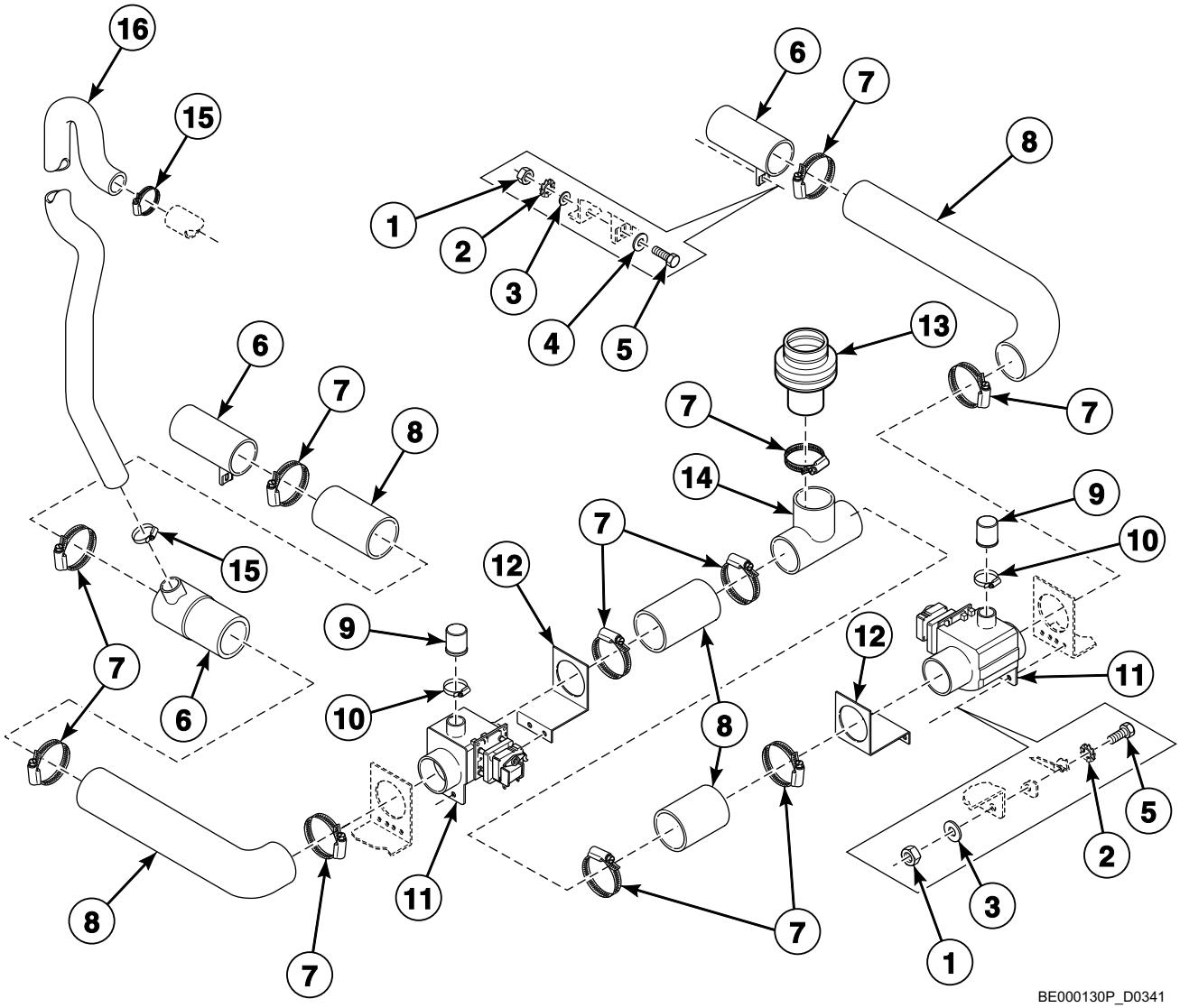

© Copyright, Alliance Laundry Systems LLC – DO NOT COPY or TRANSMIT

Drain Plumbing - Dual Drain

REF	PART NO.	DESCRIPTION	COMMENTS
1	204/00004/00	Nut	
2	203/00003/00	Washer	
3	202/00002/00	Washer	
4	201/00010/00	Washer	
5	206/00009/00	Bolt	
6	223/00106/00	Drain Pipe	
7	223/00071/00	Hose Clamp	
8	223/00141/00	Drain Valve to Drain Pipe Hose	
9	223/00086/00	Drain Valve Overflow Plug	
10	223/00012/00	Hose Clamp	
11	209/00075/00	Drain Valve	
12	115/00147/00	Drain Valve Plate Assembly	
13	223/00170/00	Exhaust Valve Hose	
14	253/00028/00	T-Piece	
15	223/00013/00	Hose Clamp	
16	223/00184/00	Overflow Hose	

© Copyright, Alliance Laundry Systems LLC – DO NOT COPY or TRANSMIT

Drain Valve - Normally Open

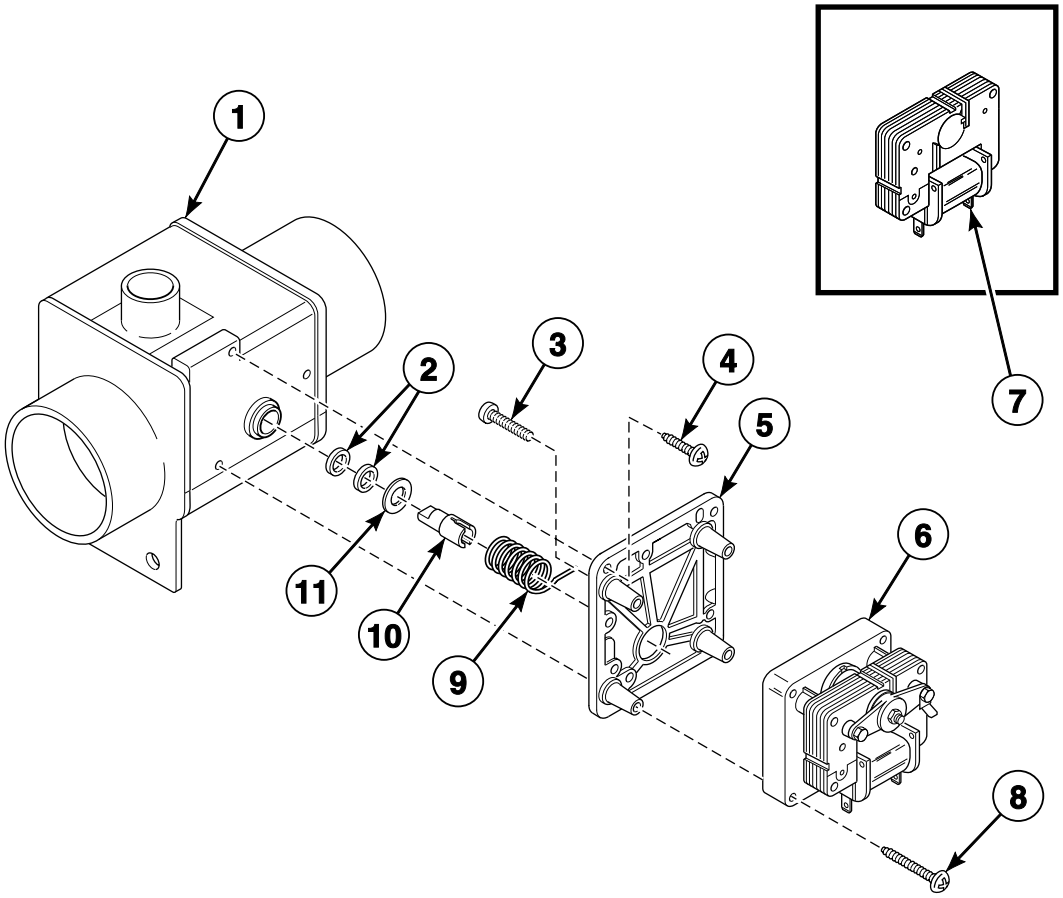

BE000058P_D0341

© Copyright, Alliance Laundry Systems LLC – DO NOT COPY or TRANSMIT

Drain Valve - Normally Open

REF	PART NO.	DESCRIPTION	COMMENTS
1	209/00075/05	Drain Valve	
2	209/00025/10	Drain Valve Shaft Seal	
3	209/00025/08	Screw	
4	209/00170/05	Screw	
5	209/00025/07	Drain Valve Motor Mounting Plate	
6	209/00203/11	Drain Valve Motor	24 Volt
	209/00052/11	Drain Valve Motor	110 Volt/60 Hertz
	209/00051/11	Drain Valve Motor	220 Volt/50 or 60 Hertz
7	209/00203/21	Coil	24 Volt
	209/00052/21	Coil	115 Volt/60 Hertz
	209/00051/21	Coil	220 Volt/50 or 60 Hertz
8	209/00170/07	Screw	
9	209/00025/13	Drain Valve Spring	
10	209/00170/10	Drain Valve Shaft	
11	209/00170/09	Washer	

© Copyright, Alliance Laundry Systems LLC – DO NOT COPY or TRANSMIT

Drain Valve - Normally Closed

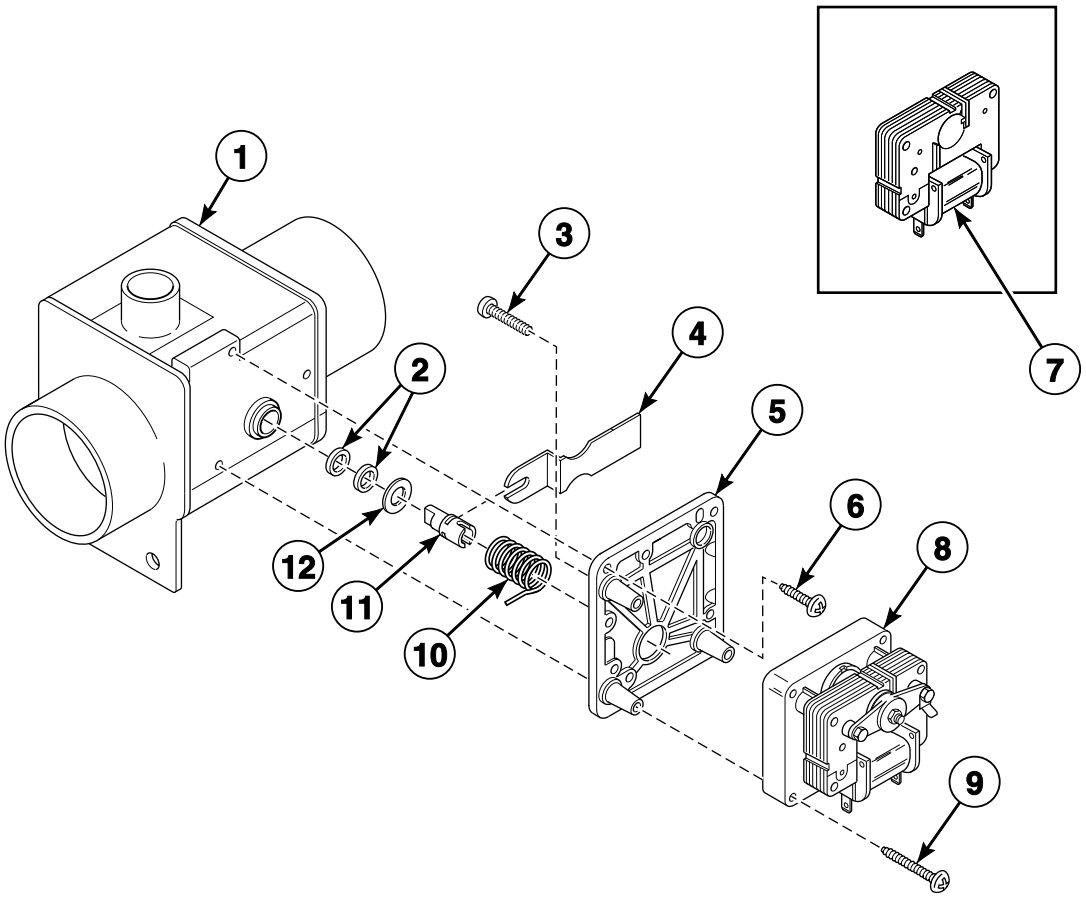

BE000057P_D0341

© Copyright, Alliance Laundry Systems LLC – DO NOT COPY or TRANSMIT

Drain Valve - Normally Closed

REF	PART NO.	DESCRIPTION	COMMENTS
1	209/00075/05	Drain Valve	
2	209/00025/10	Drain Valve Shaft Seal	
3	209/00025/08	Screw	
4	209/00115/11	Drain Valve Handle	
5	209/00115/04	Drain Valve Motor Mounting Plate	
6	209/00170/05	Screw	
7	209/00212/11	Coil	24 Volt
	209/00052/21	Coil	115 Volt/60 Hertz
	209/00051/21	Coil	220 Volt/50 or 60 Hertz
8	209/00203/12	Drain Valve Motor	24 Volt
	209/00052/12	Drain Valve Motor	110 Volt/60 Hertz
	209/00170/06	Drain Valve Motor Assembly	220 Volt/50 or 60 Hertz
9	209/00170/07	Screw	
10	209/00170/02	Drain Valve Spring	
11	209/00170/10	Drain Valve Shaft	
12	209/00025/12	Washer	

© Copyright, Alliance Laundry Systems LLC – DO NOT COPY or TRANSMIT

Door Lock

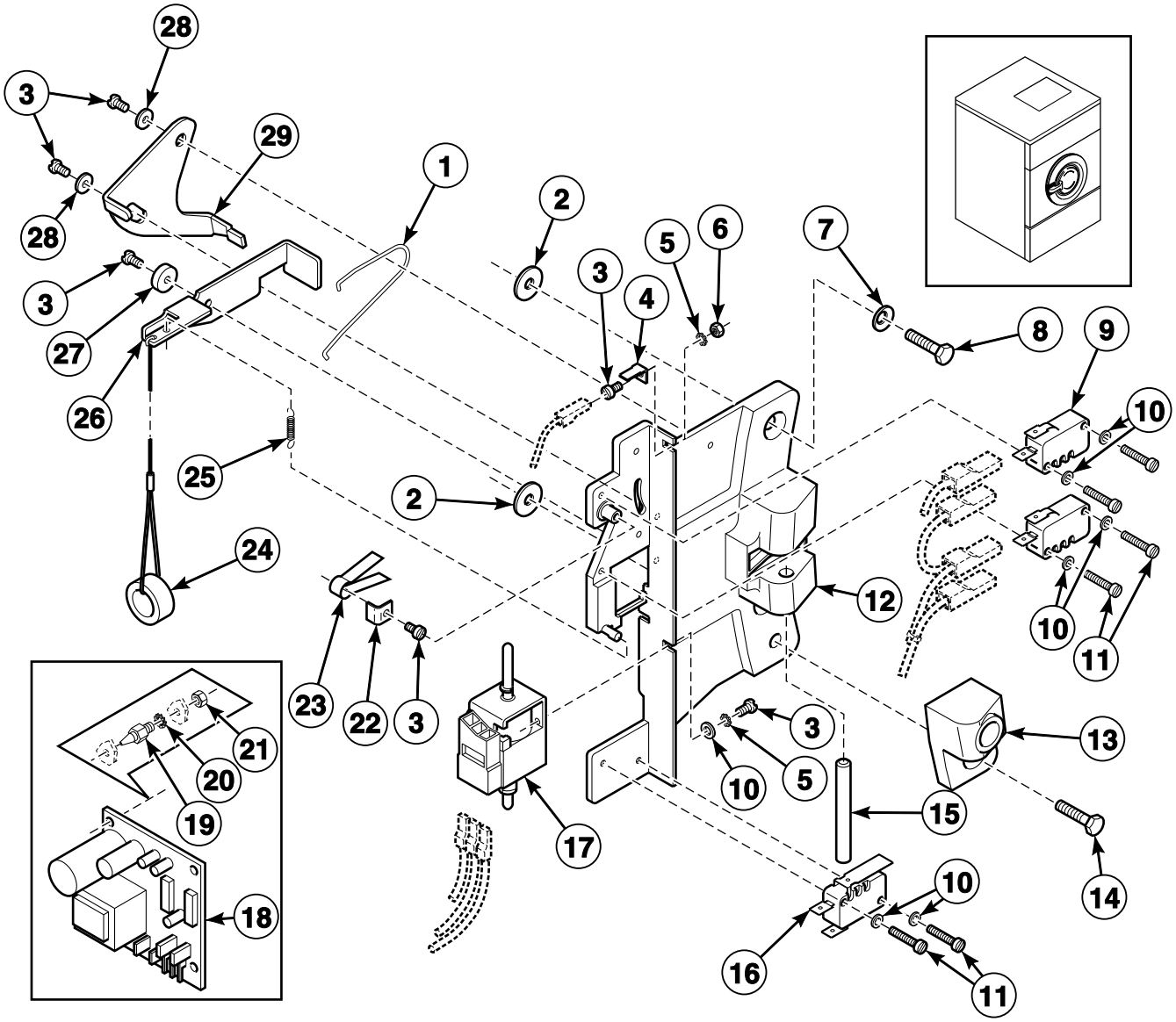

BE000059AP_D0341

© Copyright, Alliance Laundry Systems LLC – DO NOT COPY or TRANSMIT

Door Lock

REF	PART NO.	DESCRIPTION	COMMENTS
1	224/00040/00	Lever Spring	
2	217/00021/00	O-Ring	
3	207/00135/00	Screw	
4	210/10015/00	Ground Terminal	
5	203/00007/00	Washer	
6	204/00008/00	Nut	
7	203/00010/00	Washer	
8	207/00103/00	Screw	
9	209/00272/00	Door Lock Microswitch	
10	201/00018/00	Washer	
11	207/00009/00	Screw	
12	217/00052/01	Door Lock Assembly	
13	217/00052/02	Door Lock Pin Kit	
14	207/00102/00	Screw	
15	217/00017/03	Lock Shaft	
16	209/00273/00	Light Microswitch	
17	209/00274/00	Door Lock Solenoid	
18	209/00275/04	Door Lock Board	
19	211/00120/00	Standoff	
20	203/00006/00	Washer	
21	204/00007/00	Nut	
22	217/00052/08	Washer	
23	224/00049/00	Door Lock Spring	
24	224/00015/00	Door Latch Cord	
25	224/00043/00	Interlock Coil Spring	
25	217/00052/04	Interlock Lever	
27	217/00052/03	Door Lock Spacer	
28	201/00017/00	Washer	
29	217/00052/05	Switch Lever	

© Copyright, Alliance Laundry Systems LLC – DO NOT COPY or TRANSMIT

Door

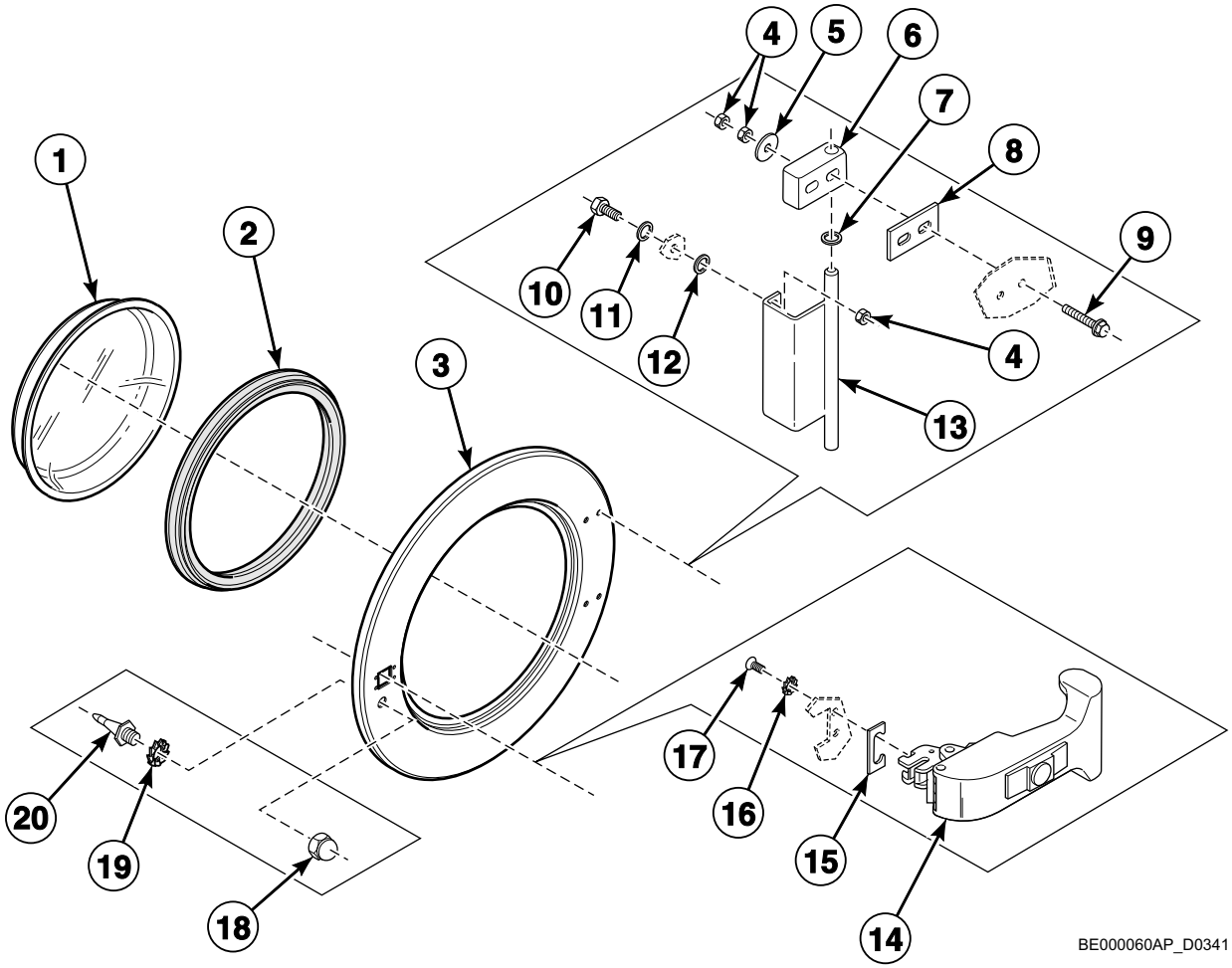

© Copyright, Alliance Laundry Systems LLC – DO NOT COPY or TRANSMIT

Door

REF	PART NO.	DESCRIPTION	COMMENTS
1	B12449801	Door Glass	
2	223/00068/00	Door Glass Seal	
3	118/00125/00	Door	
4	204/00106/00	Nut	
5	202/00108/00	Washer	
6	253/00022/00	Door Hinge Block	
7	202/00104/00	Washer	
8	117/00010/00	Door Hinge Spacer	2 mm
9	207/00126/00	Screw	
10	205/00104/00	Bolt	
11	202/00101/00	Washer	
12	217/00021/00	O-Ring	
13	131/00046/00	Hinge	
14	217/00051/00	Door Handle	
15	217/00016/00	Door Handle Stop	
16	203/00008/00	Washer	
17	207/00020/00	Screw	
18	204/00103/00	Nut	
19	203/00011/00	Washer	
20	211/00109/00	Door Lock Pin Kit	

© Copyright, Alliance Laundry Systems LLC – DO NOT COPY or TRANSMIT

Door Handle

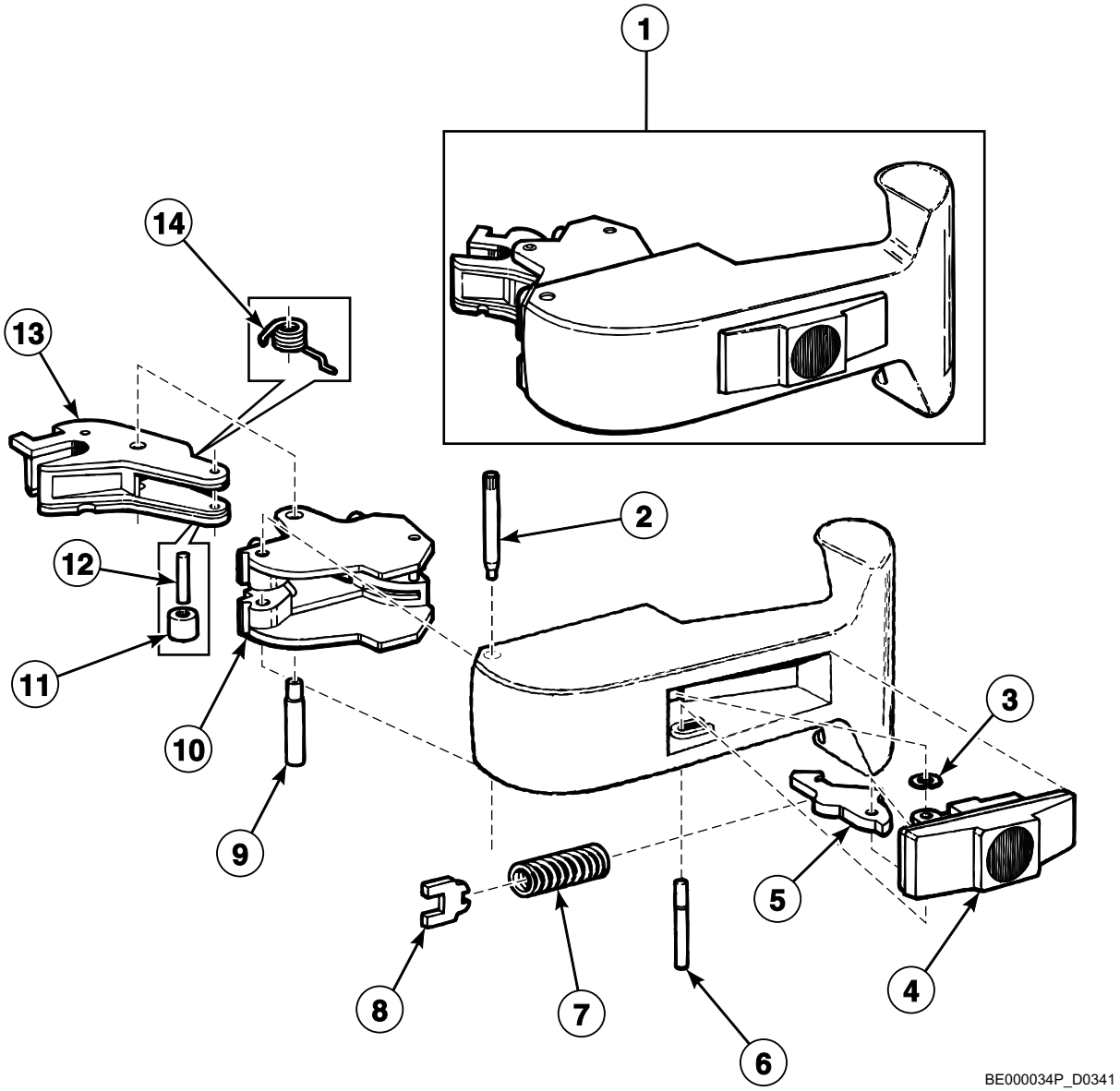

© Copyright, Alliance Laundry Systems LLC – DO NOT COPY or TRANSMIT

Door Handle

REF	PART NO.	DESCRIPTION	COMMENTS
1	217/00051/00	Door Handle	
2	217/00013/09	Door Mounting Pin	
3	217/00013/11	Door Circlip	
4	217/00013/12	Door Handle	
5	217/00013/13	Door Handle Hook	
6	217/00013/15	Door Handle Locking Pin	
7	217/00013/14	Door Handle Spring	
8	217/00013/16	Door Handle Assembly Plate	
9	217/00013/08	Door Locking Pin	
10	217/00013/07	Door Locking Grip	
11	217/00013/06	Door Roller	
12	217/00013/05	Door Axle Roller	
13	217/00013/04	Door Handle Latch	
14	217/00013/03	Door Lock Spring	

© Copyright, Alliance Laundry Systems LLC – DO NOT COPY or TRANSMIT

Control Module - PC30

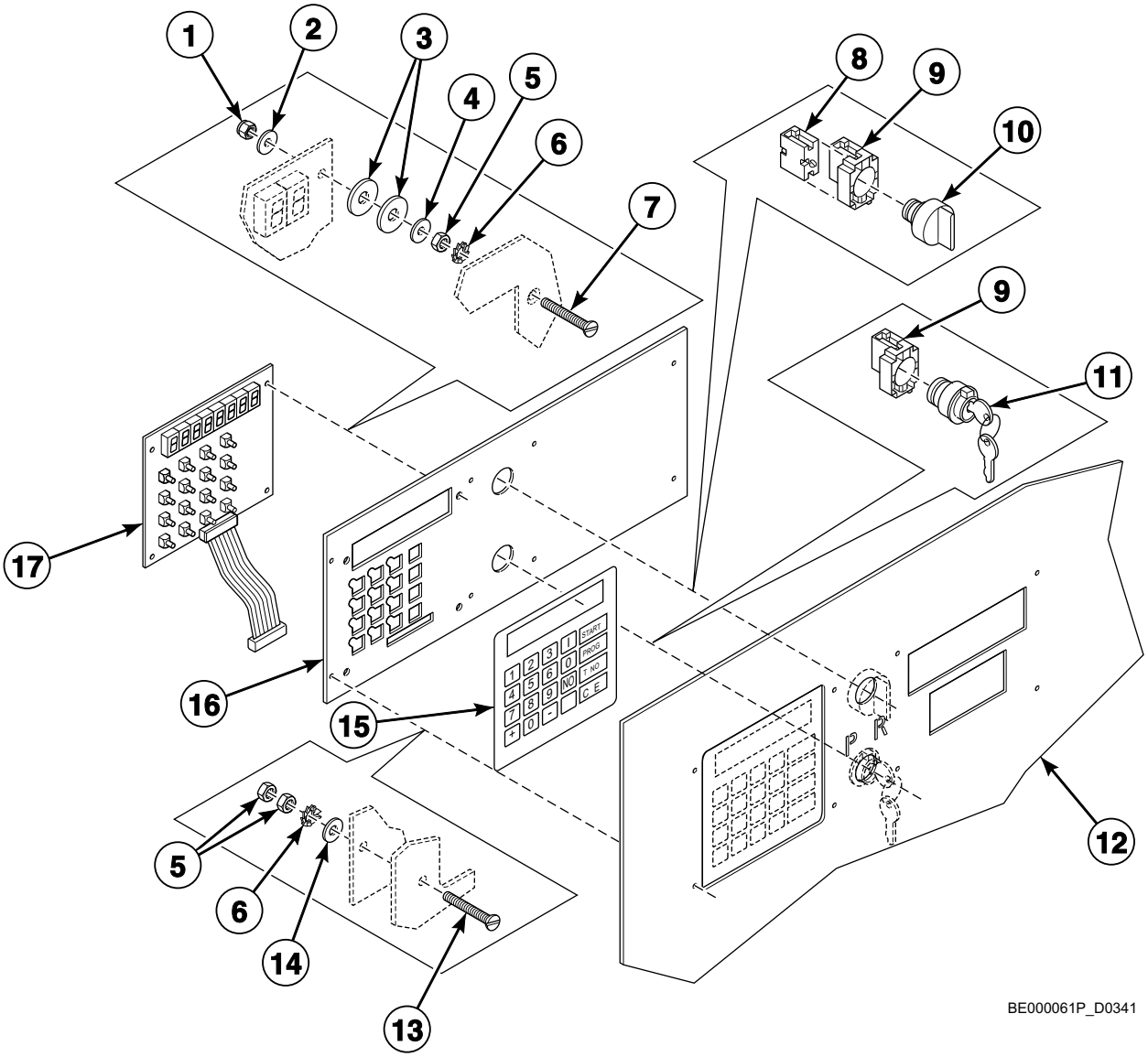

© Copyright, Alliance Laundry Systems LLC – DO NOT COPY or TRANSMIT

Control Module - PC30

REF	PART NO.	DESCRIPTION	COMMENTS
1	204/00116/00	Nut	
2	223/00123/00	Washer	
3	223/00051/10	Washer	
4	201/00008/00	Washer	
5	204/00008/00	Nut	
6	203/00007/00	Washer	
7	207/00025/00	Screw	
8	209/00099/06	Contact Switch	
9	209/00099/05	Contact	
10	209/00099/09	Button	
11	209/00326/00	Programming Switch	
12	153/00107/00	Front Panel	
13	207/00108/00	Screw	
14	202/00004/00	Washer	
15	229/00245/00	Label	
16	173/00012/00	Mounting Plate	
17	209/00323/01	Keyboard	

© Copyright, Alliance Laundry Systems LLC – DO NOT COPY or TRANSMIT

Electrical Component Mounting Plate - Models with KEB Inverter Drive

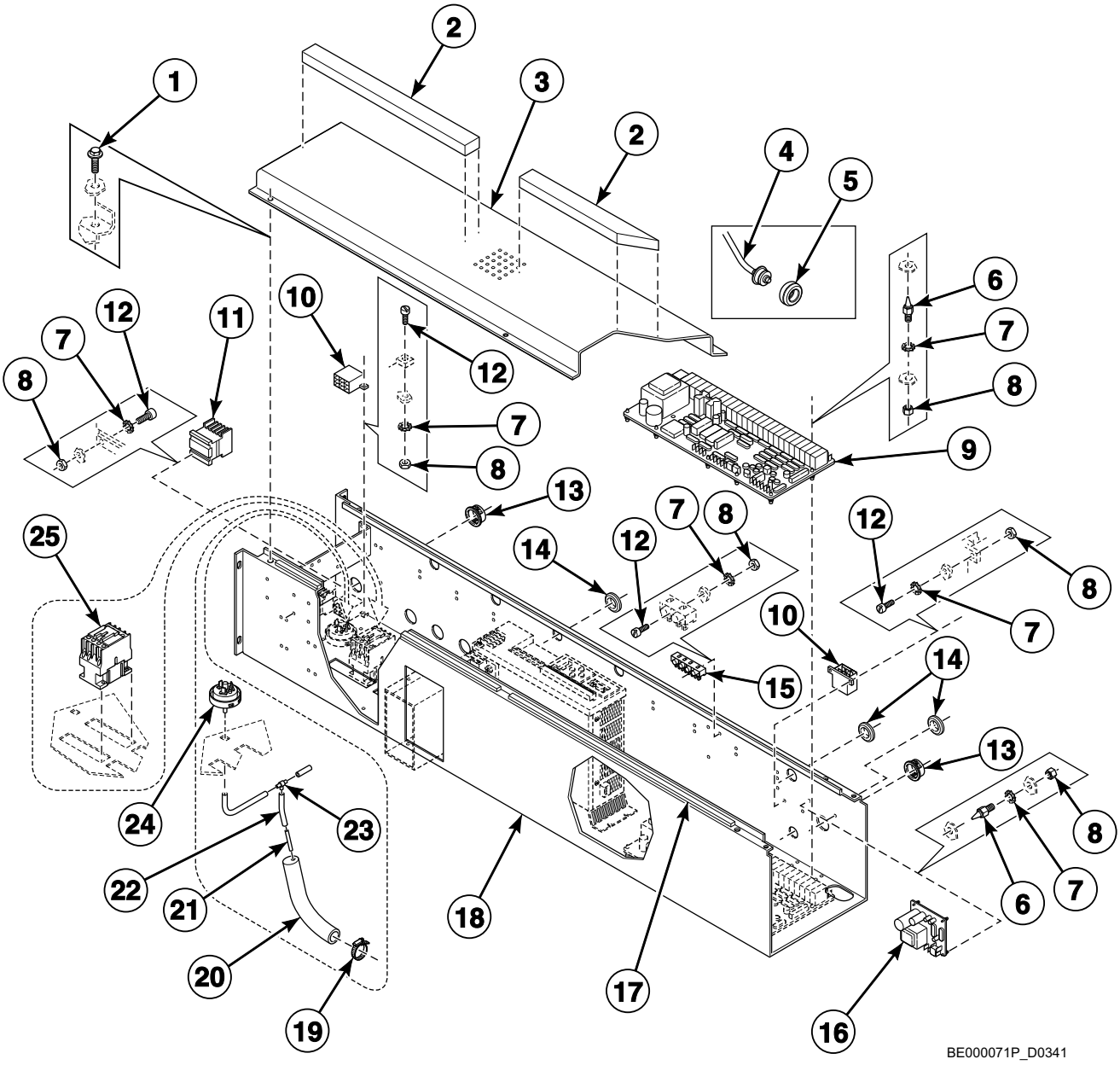

© Copyright, Alliance Laundry Systems LLC – DO NOT COPY or TRANSMIT

Electrical Component Mounting Plate - Models with KEB Inverter Drive

REF	PART NO.	DESCRIPTION	COMMENTS
1	206/00099/00	Bolt	
2	246/00149/00	Gasket	
3	153/00111/01	Top Cover Plate	HF450 models
	153/00112/01	Top Cover Plate	HF570 models
4	209/00266/08	Thermostat	
5	225/10004/00	Thermostat Seal	
6	211/00120/00	Standoff	
7	203/00006/00	Washer	
8	204/00007/00	Nut	
9	209/00323/02	Printboard	
10	209/00141/00	Plug	
11	209/00124/00	Contactor	
12	207/00003/00	Screw	
13	225/00027/00	Cable Duct	
14	225/00019/00	Holder	
15	209/00005/00	Terminal Block	
16	209/00275/04	Door Lock Board	
17	246/00092/00	Gasket	
18	153/00111/00	Assembly Plate	HF450 models
	153/00112/00	Assembly Plate	HF570 models
19	223/00011/00	Hose Clamp	
20	223/00015/00	Level Switch Elbow	
21	223/00016/00	Hose Barb	
22	223/00082/00	Pressure Hose	
23	223/00035/01	Hose Tee	
24	209/00007/50	Pressure Switch	
25	209/00148/02	Contactor	

© Copyright, Alliance Laundry Systems LLC – DO NOT COPY or TRANSMIT

Electrical Component Mounting Plate - Models with Mitsubishi Inverter Drive

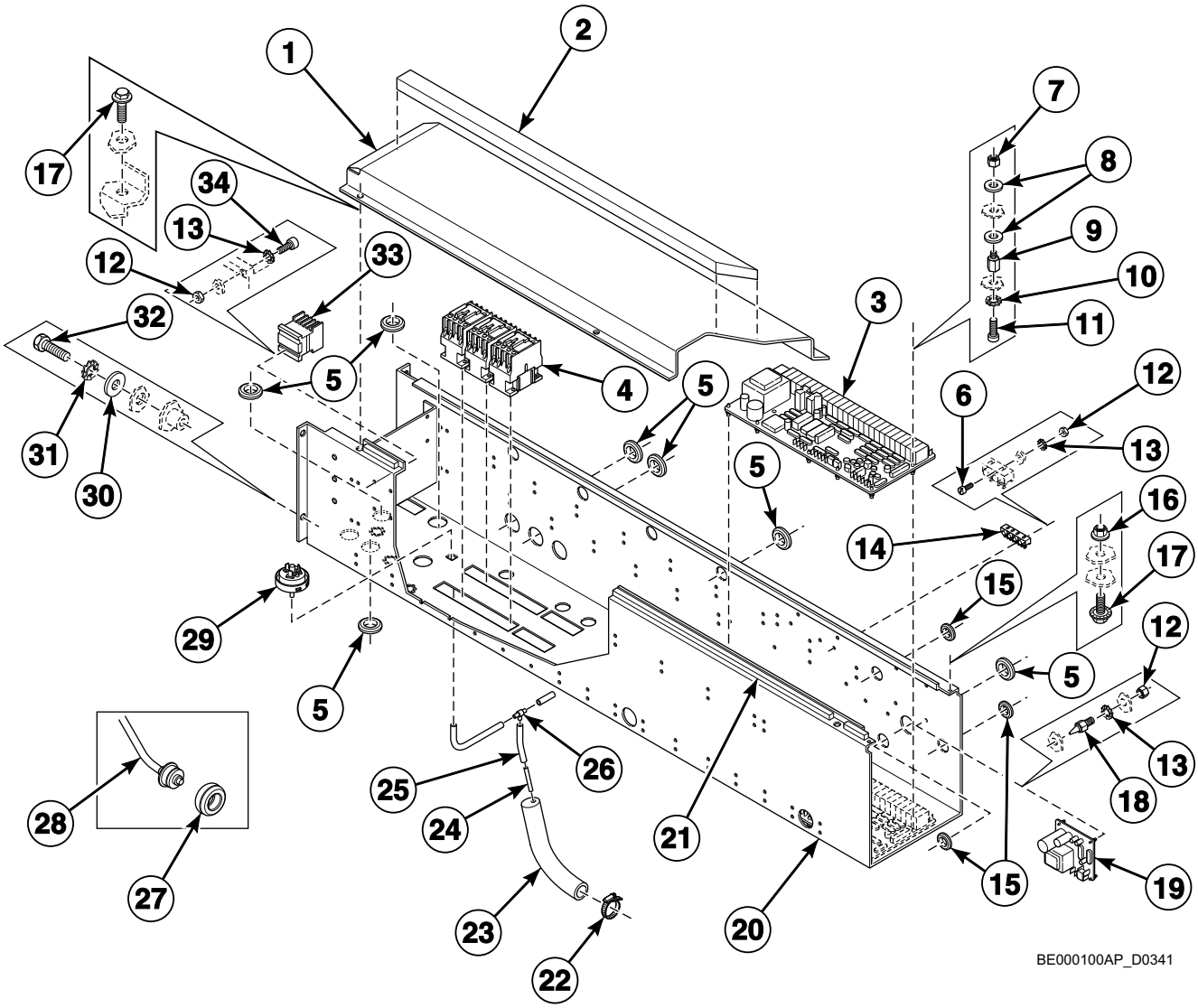

© Copyright, Alliance Laundry Systems LLC – DO NOT COPY or TRANSMIT

Electrical Component Mounting Plate - Models with Mitsubishi Inverter Drive

REF	PART NO.	DESCRIPTION	COMMENTS
1	153/00112/01	Top Cover Plate	HF570 models
	153/00111/01	Top Cover Plate	HF450 models
2	246/00149/00	Gasket	
3	209/00323/02	Printboard	
4	209/00148/02	Contactor	
5	223/00198/00	Grommet	
6	207/00008/00	Screw	
7	204/00116/00	Nut	
8	223/00123/00	Washer	
9	206/00141/00	Separator	
10	203/00007/00	Washer	
11	207/00135/00	Screw	
12	204/00007/00	Nut	
13	203/00006/00	Washer	
14	209/00005/00	Terminal Block	
15	223/00174/00	Grommet	
16	206/00101/00	Nut	
17	206/00099/00	Bolt	
18	211/00120/00	Standoff	
19	209/00275/04	Door Lock Board	
20	153/00111/00	Assembly Plate	HF450 models
	153/00112/00	Assembly Plate	HF570 models
21	246/00092/00	Gasket	
22	223/00011/00	Hose Clamp	
23	223/00210/00	Pressure Switch Elbow	
24	223/00016/00	Hose Barb	
25	223/00212/00	Pressure Switch Hose	
26	223/00035/01	Hose Tee	
27	225/10004/00	Thermostat Seal	
28	209/00266/08	Thermostat	
29	209/00007/50	Pressure Switch	
30	201/00007/00	Washer	
31	203/00004/00	Washer	
32	205/00105/00	Bolt	
33	209/00124/00	Contactor	
34	207/00003/00	Screw	

© Copyright, Alliance Laundry Systems LLC – DO NOT COPY or TRANSMIT

Inverter Drive

Models with Mitsubishi Inverter Drive

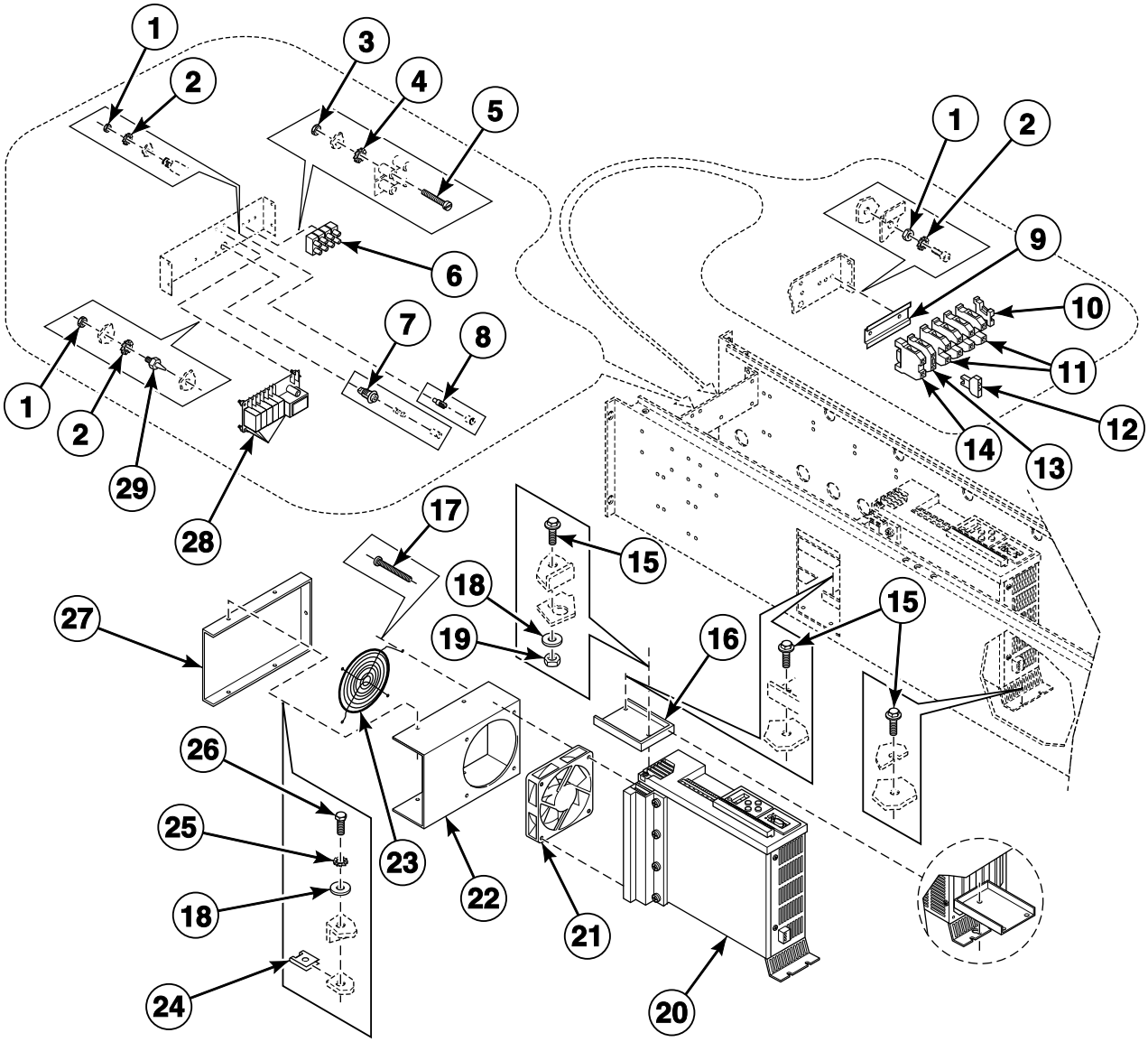

BE000072P_D0341

© Copyright, Alliance Laundry Systems LLC – DO NOT COPY or TRANSMIT

Inverter Drive

REF	PART NO.	DESCRIPTION	COMMENTS
1	204/00007/00	Nut	
2	203/00006/00	Washer	
3	204/00008/00	Nut	
4	203/00007/00	Washer	
5	207/00014/00	Screw	
6	209/00057/00	Terminal	3 pole
	209/00058/00	Terminal Block	4 pole
7	209/00202/00	Fuse Holder	
8	209/00006/00	Terminal	
9	720/00110/01	Rail	
10	209/00319/00	Clamp	
11	209/00317/02	Clamp	
	209/00317/01	Clamp	
12	209/00318/02	Clamp	
13	209/00318/01	Clamp	
14	209/00317/04	Clamp	
15	206/00099/00	Bolt	
16	153/00111/02	Assembly Plate	
17	227/00120/03	Screw	
18	201/00007/00	Washer	
19	204/00106/00	Nut	
20	227/00120/00	Inverter	
21	227/00120/02	Fan	
22	153/00111/03	Inverter Box	
23	227/00120/01	Fan	
24	208/00002/00	Nut	
25	203/00005/00	Washer	
26	208/00001/00	Screw	
27	153/00111/04	Inverter Top	
28	209/00218/01	Printboard	
29	211/00120/00	Standoff	

© Copyright, Alliance Laundry Systems LLC – DO NOT COPY or TRANSMIT

Main Switch and Printboard

Models with Mitsubishi Inverter Drive

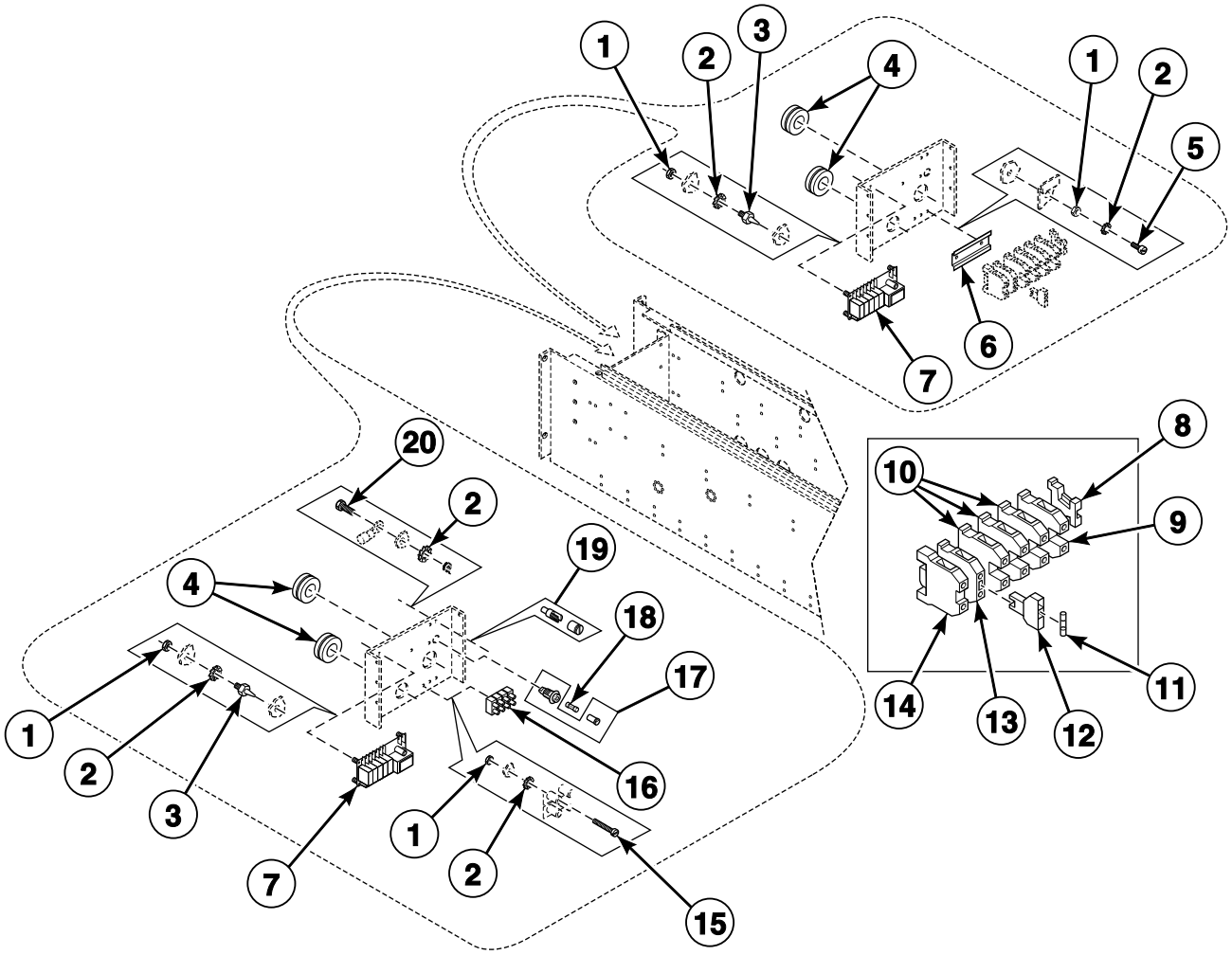

BE000101P_D0341

© Copyright, Alliance Laundry Systems LLC – DO NOT COPY or TRANSMIT

Main Switch and Printboard

REF	PART NO.	DESCRIPTION	COMMENTS
1	204/00007/00	Nut	
2	203/00006/00	Washer	
3	211/00120/00	Standoff	
4	223/00198/00	Grommet	
5	207/00008/00	Screw	
6	720/00110/01	Rail	
7	209/00218/01	Printboard	
8	209/00319/00	Clamp	
9	209/00317/02	Clamp	
10	209/00317/01	Clamp	
11	209/00468/00	Fuse	
12	209/00318/02	Clamp	
13	209/00318/01	Clamp	
14	209/00317/04	Clamp	
15	207/00031/00	Screw	
16	209/00058/00	Terminal Block	
17	209/00202/00	Fuse Holder	
18	209/00195/00	Fuse	
19	209/00006/00	Terminal	
20	206/00027/00	Bolt	

© Copyright, Alliance Laundry Systems LLC – DO NOT COPY or TRANSMIT

Left Side, Front and Top Panels

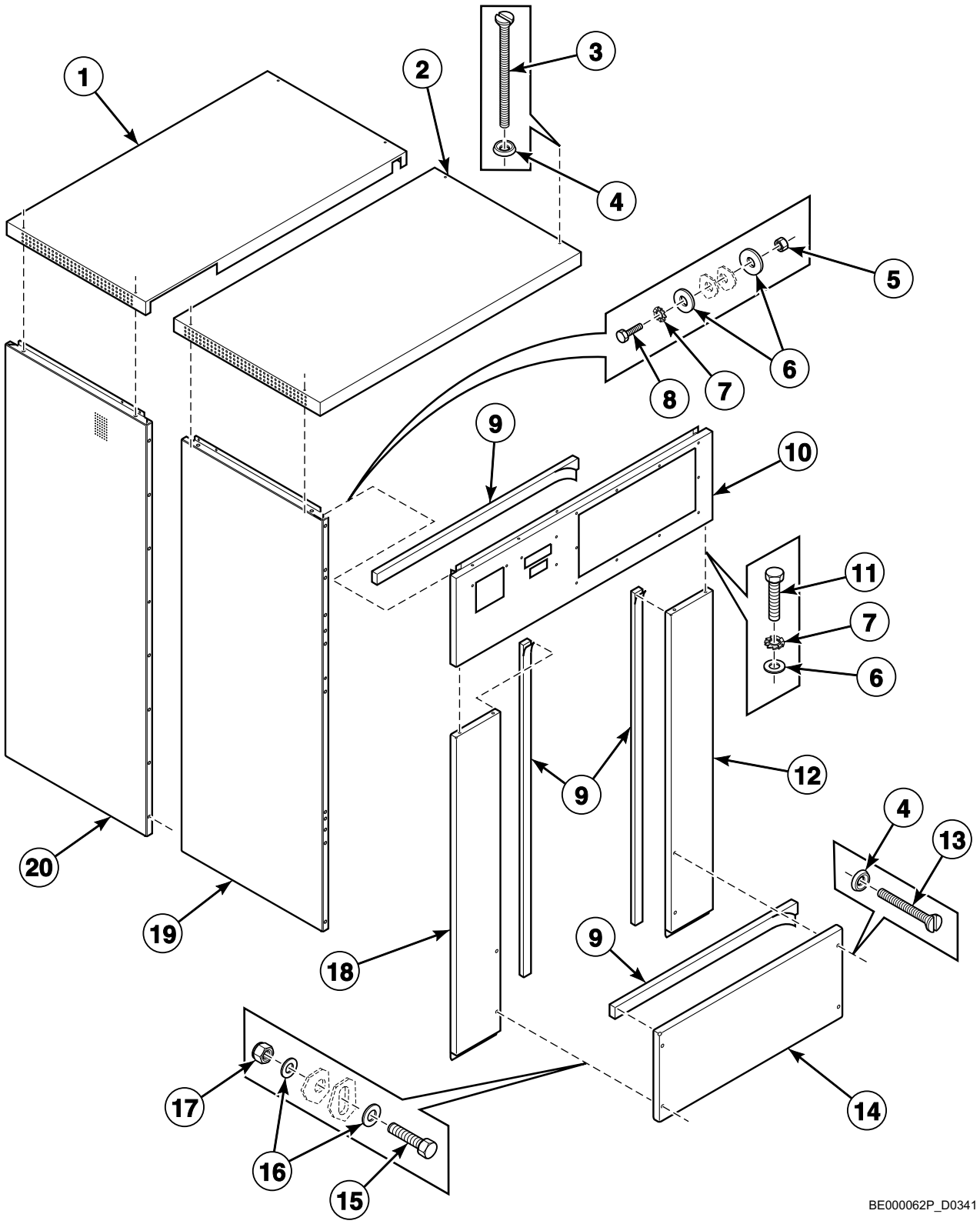

© Copyright, Alliance Laundry Systems LLC – DO NOT COPY or TRANSMIT

Left Side, Front and Top Panels

REF	PART NO.	DESCRIPTION	COMMENTS
1	153/00033/02	Rear Cabinet Top	HF450 models
	153/00034/02	Rear Cabinet Top	HF570 models
2	153/00033/01	Front Cabinet Top	HF450 models
	153/00034/01	Front Cabinet Top	HF570 models
3	207/00123/00	Screw	
4	208/00009/00	Washer	
5	204/00106/00	Nut	
6	202/00106/00	Washer	
7	203/00004/00	Washer	
8	205/00104/00	Bolt	
9	246/00149/00	Gasket	
10	153/00107/00	Front Panel	
11	205/00105/00	Bolt	
12	153/00110/00	Front Panel	
13	207/00101/00	Screw	
14	153/00113/00	Lower Front Panel	
15	206/00042/00	Bolt	
16	202/00111/00	Washer	
17	204/00109/00	Nut	
18	153/00109/00	Front Panel	
19	153/00104/00	Side Panel	HF450 models
	153/00106/00	Side Panel	HF570 models
20	153/00103/00	Side Panel	HF450 models
	153/00105/00	Side Panel	HF570 models

© Copyright, Alliance Laundry Systems LLC – DO NOT COPY or TRANSMIT

Right Side and Rear Panels

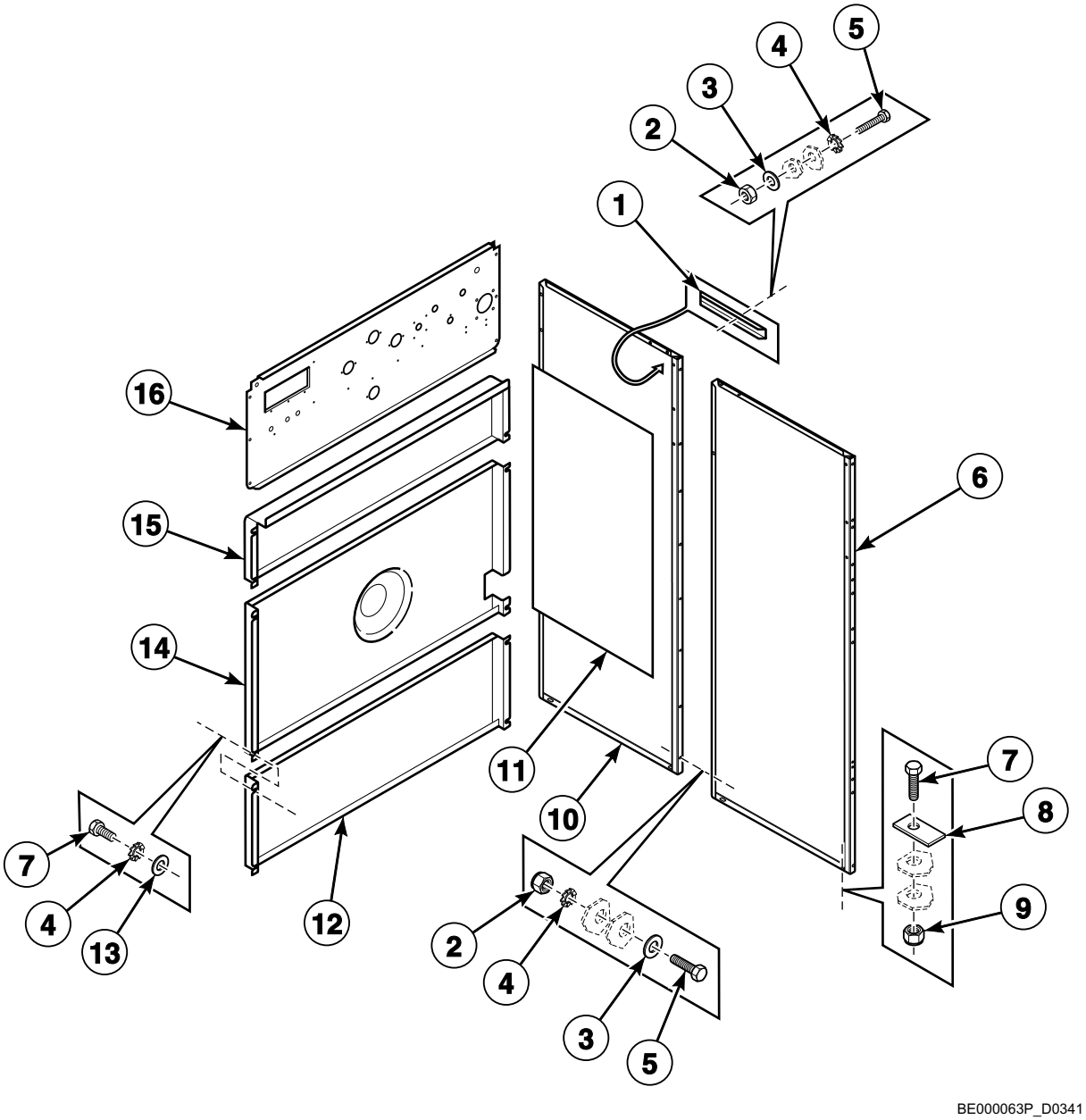

© Copyright, Alliance Laundry Systems LLC – DO NOT COPY or TRANSMIT

Right Side and Rear Panels

REF	PART NO.	DESCRIPTION	COMMENTS
1	153/00103/01	Side Panel Support Assembly	
2	204/00106/00	Nut	
3	202/00110/00	Washer	
4	203/00004/00	Washer	
5	205/00104/00	Bolt	
6	153/00103/00	Side Panel	HF450 models
	153/00105/00	Side Panel	HF570 models
7	205/00105/00	Bolt	
8	101/00007/00	Outlet Pipe Plate Assembly	
9	204/00009/00	Nut	
10	153/00104/00	Side Panel	HF450 models
	153/00106/00	Side Panel	HF570 models
11	246/00079/00	Side Panel Gasket	
12	153/00114/C0	Back Panel Support Assembly	
13	202/00106/00	Washer	
14	153/00114/B0	Back Panel Support Assembly	
15	153/00114/AO	Upper Back Panel	
16	153/00027/00	Backbridge	

© Copyright, Alliance Laundry Systems LLC – DO NOT COPY or TRANSMIT

Upper Back Panel - Models with KEB Inverter Drive

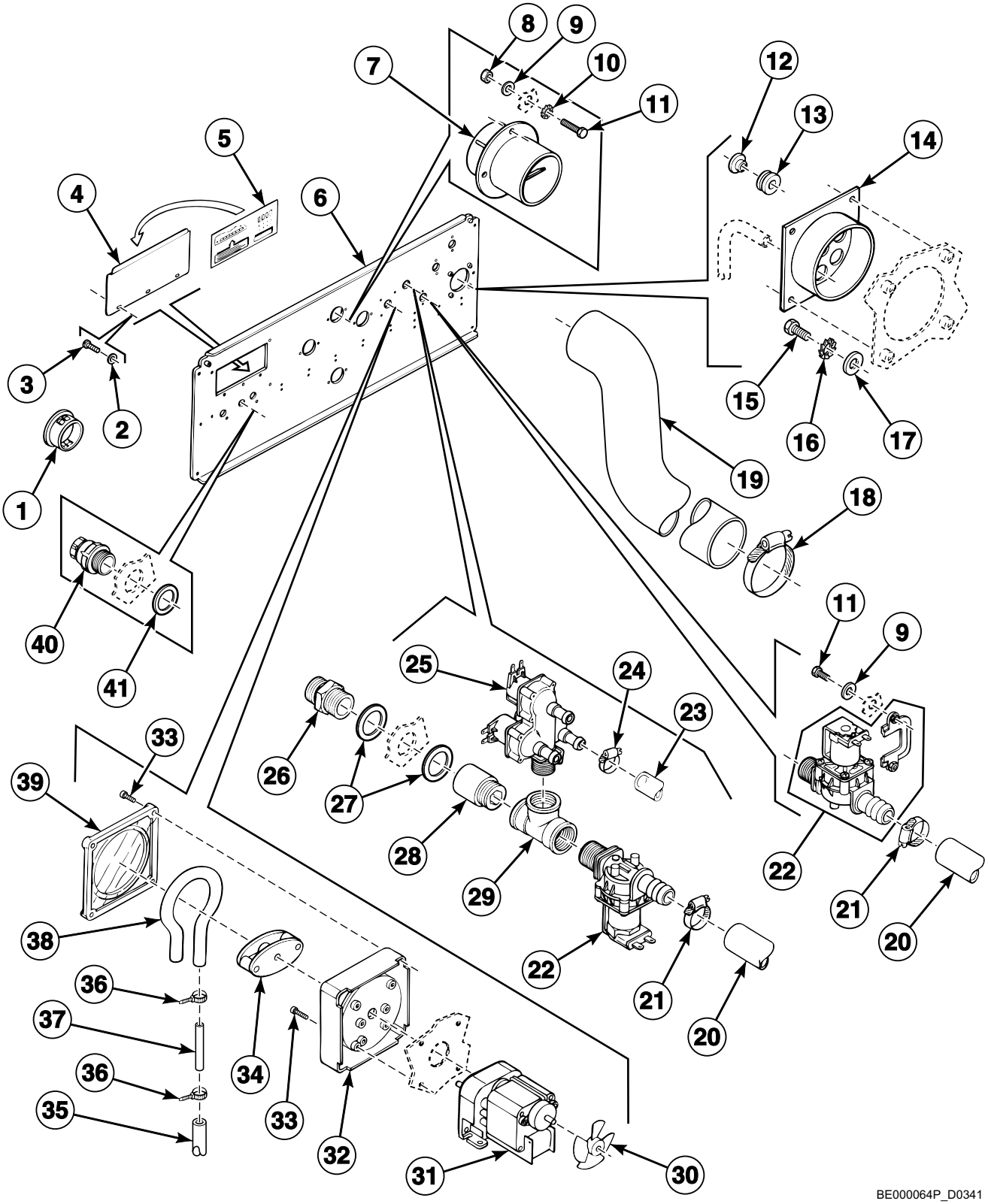

© Copyright, Alliance Laundry Systems LLC – DO NOT COPY or TRANSMIT

Upper Back Panel - Models with KEB Inverter Drive

REF	PART NO.	DESCRIPTION	COMMENTS
1	211/00087/00	Plug	30 mm diameter
	211/00084/00	Plug	20.5 mm diameter
2	202/00102/00	Washer	
3	207/00110/00	Screw	
4	140/00010/00	Cover Plate	
5	229/00250/00	Label	
6	153/00027/00	Backbridge	
7	223/00102/07	Hose Vent	
8	204/00007/00	Nut	
9	202/00004/00	Washer	
10	203/00006/00	Washer	
11	206/00027/00	Bolt	
12	211/00129/00	Plug	
13	225/00019/00	Holder	
14	153/00043/00	Inlet	
15	205/00104/00	Bolt	
16	203/00004/00	Washer	
17	202/00101/00	Washer	
18	223/00014/00	Hose Clamp	
19	223/00185/00	Hose	
20	223/00059/00	Water Hose	
21	223/00011/00	Hose Clamp	
22	209/00137/00	Inlet Valve	
23	223/00044/00	Water Hose	
24	223/00010/00	Hose Clamp	
25	209/00277/00	3-Way Inlet Valve	
26	223/00121/00	Connector	
27	223/00042/00	O-Ring	
28	711/00058/00	Extension Piece	
29	223/00043/00	T-Piece	
30	209/00420/05	Fan	
31	209/00420/04	Motor	
32	209/00420/02	Pump Housing	
33	209/00420/07	Screw	
34	209/00420/03	Pressure Roller	
35	223/00179/00	Soap Injector Hose	
36	211/00088/00	Cable Tie	
37	223/00180/00	Soap Injector Hose	
38	209/00420/01	Hose	
39	209/00420/06	Cover Plate	
40	211/00022/01	Nut	
41	211/00022/00	Nut	

© Copyright, Alliance Laundry Systems LLC – DO NOT COPY or TRANSMIT

Upper Back Panel (Drawing 1 of 2)

Models with Mitsubishi Inverter Drive

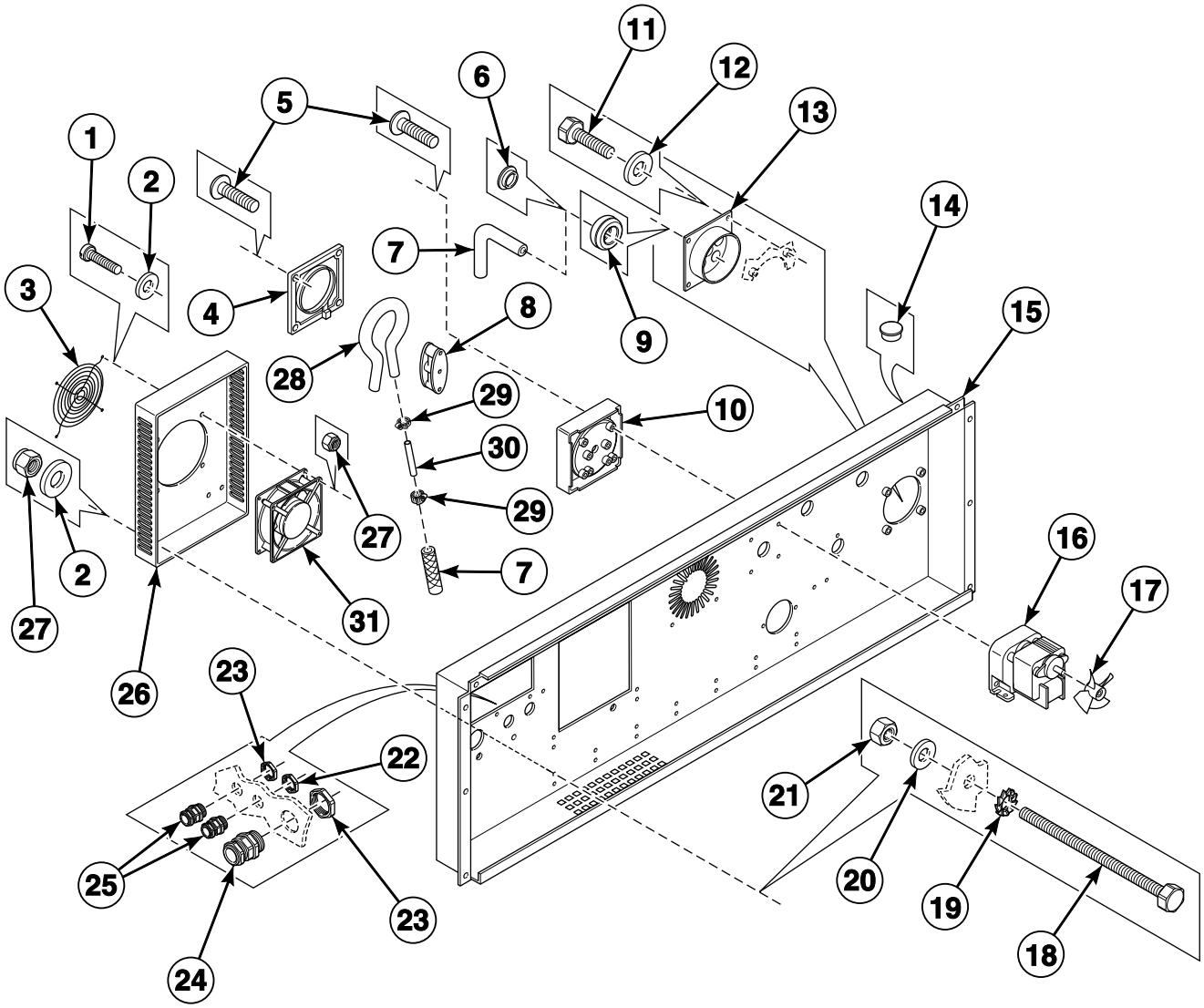

BE000097P_D0341

© Copyright, Alliance Laundry Systems LLC – DO NOT COPY or TRANSMIT

Upper Back Panel (Drawing 1 of 2)

REF	PART NO.	DESCRIPTION	COMMENTS
1	207/00105/00	Screw	
2	202/00004/00	Washer	
3	209/00465/01	Fan Grill	
4	209/00420/06	Cover Plate	
5	209/00420/07	Screw	
6	211/00129/00	Plug	
7	223/00179/00	Soap Injector Hose	
8	209/00420/03	Pressure Roller	
9	223/00174/00	Grommet	
10	209/00420/02	Pump Housing	
11	205/00104/00	Bolt	
12	202/00110/00	Washer	
13	153/00043/00	Inlet	
14	211/00087/00	Plug	
15	153/00027/01	Backbridge	
16	209/00420/04	Motor	
17	209/00420/05	Fan	
18	206/00136/00	Bolt	
19	203/00006/00	Washer	
20	202/00101/00	Washer	
21	204/00007/00	Nut	
22	211/00097/01	Cordlock	
23	211/00118/00	Cordlock	
24	211/00097/00	Cordlock	
25	211/00117/00	Cordlock	
26	153/00027/02	Fan Cover	
27	204/00114/00	Nut	
28	209/00420/01	Hose	
29	211/00088/00	Cable Tie	
30	223/00180/00	Soap Injector Hose	
31	209/00287/00	Cooling Fan	

© Copyright, Alliance Laundry Systems LLC – DO NOT COPY or TRANSMIT

Upper Back Panel (Drawing 2 of 2)

Models with Mitsubishi Inverter Drive

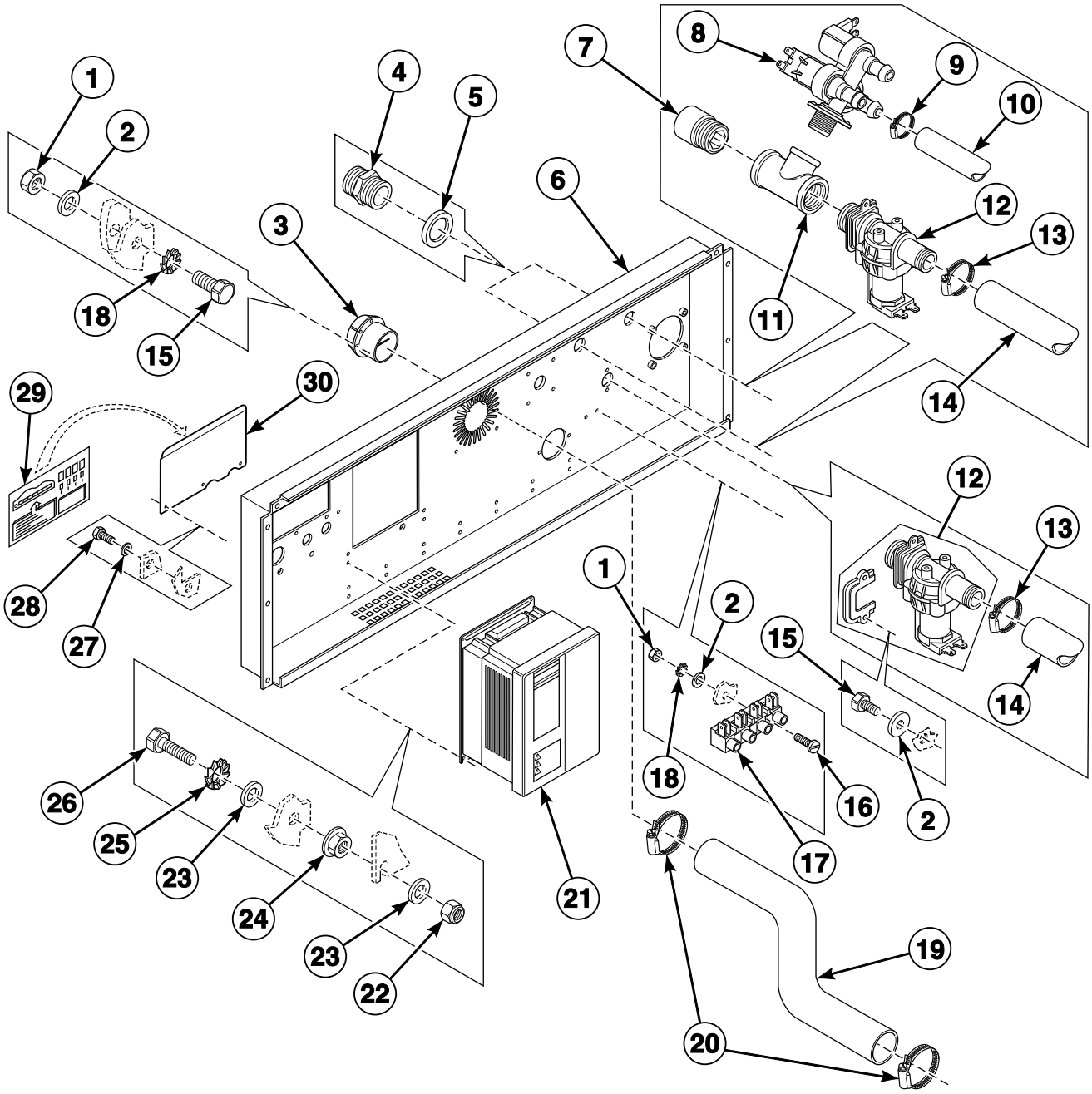

BE000098P_D0341

© Copyright, Alliance Laundry Systems LLC – DO NOT COPY or TRANSMIT

Upper Back Panel (Drawing 2 of 2)

REF	PART NO.	DESCRIPTION	COMMENTS
1	204/00007/00	Nut	
2	202/00004/00	Washer	
3	223/00102/07	Hose Vent	
4	223/00121/00	Connector	
5	223/00042/00	O-Ring	
6	153/00027/01	Backbridge	
7	711/00058/00	Extension Piece	
8	209/00277/00	3-Way Inlet Valve	
9	223/00010/00	Hose Clamp	
10	223/00044/00	Water Hose	
11	223/00043/00	T-Piece	
12	209/00137/00	Inlet Valve	
13	223/00011/00	Hose Clamp	
14	223/00059/00	Water Hose	
15	206/00027/00	Bolt	
16	207/00105/00	Screw	
17	209/00005/00	Terminal Block	
18	203/00006/00	Washer	
19	223/00211/00	Vent Hose	
20	223/00071/00	Hose Clamp	
21	227/00130/00	Inverter	HF450 models; 5.5 kW
	227/00131/00	Inverter	HF570 models; 7.5 kW
22	204/00009/00	Nut	
23	202/00101/00	Washer	
24	206/00101/00	Nut	
25	203/00004/00	Washer	
26	205/00103/00	Bolt	
27	207/00110/00	Screw	
28	202/00102/00	Washer	
29	229/00250/00	Label	
30	140/00010/00	Cover Plate	

© Copyright, Alliance Laundry Systems LLC – DO NOT COPY or TRANSMIT

Water Inlet Valves

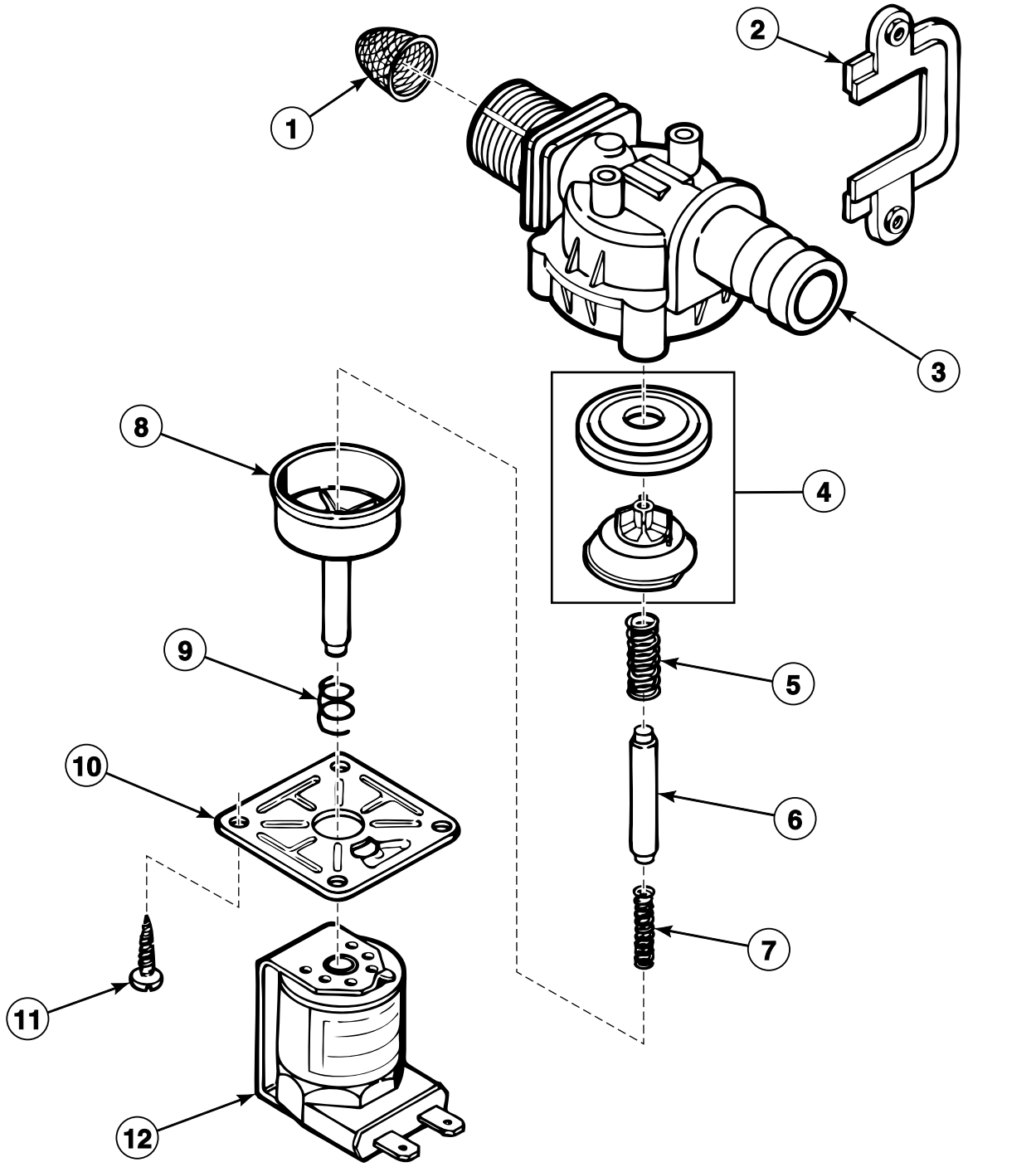

BE000065P_D0341

© Copyright, Alliance Laundry Systems LLC – DO NOT COPY or TRANSMIT

Water Inlet Valves

REF	PART NO.	DESCRIPTION	COMMENTS
1	223/00060/00	Filter	
2	209/00137/04	Inlet Valve Plate	
3	209/00137/02	Valve	
4	209/00138/01	Diaphragm	
5	209/00090/19	Diaphragm Spring	
6	209/00138/02	Inlet Valve	
7	209/00138/05	Spring	
8	209/00138/03	Spring	
9	209/00090/02	Spring	
10	209/00137/03	Valve Plate	
11	209/00090/03	Screw	
12	209/00090/01	Inlet Valve Solenoid	

© Copyright, Alliance Laundry Systems LLC – DO NOT COPY or TRANSMIT

Supply Dispenser Plumbing - Models with Mueller Valves

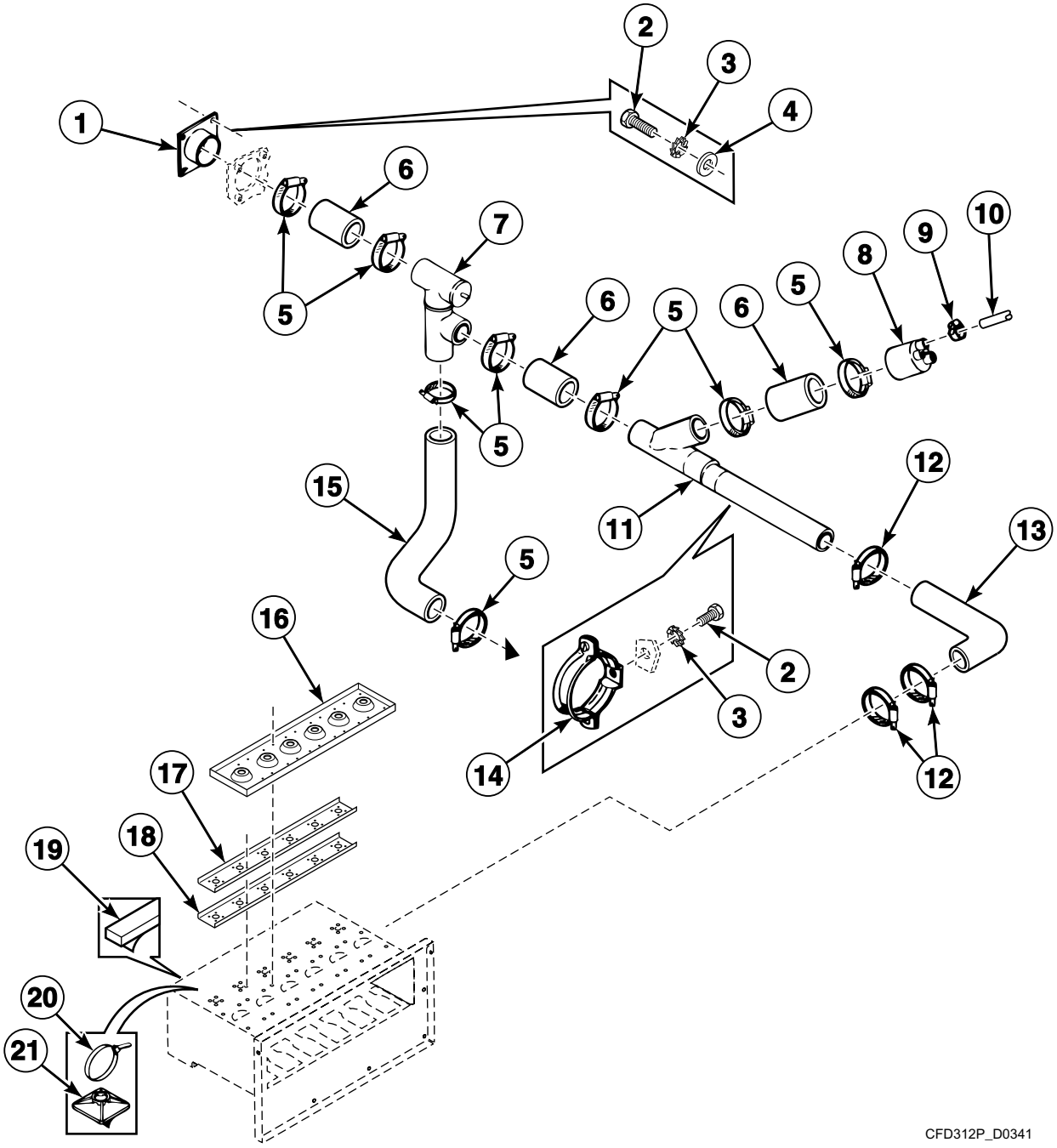

© Copyright, Alliance Laundry Systems LLC – DO NOT COPY or TRANSMIT

Supply Dispenser Plumbing - Models with Mueller Valves

REF	PART NO.	DESCRIPTION	COMMENTS
1	153/00043/00	Inlet	
2	207/00111/00	Screw	
3	203/00004/00	Washer	
4	202/00101/00	Washer	
5	223/00071/00	Hose Clamp	
6	223/00183/00	Drain Hose	
7	253/00020/00	T-Piece	
8	223/00289/00	Water Inlet Grid	
9	223/00011/00	Hose Clamp	
10	223/00059/00	Water Hose	
11	253/00021/00	Reducing Tee	
12	223/00014/00	Hose Clamp	
13	223/00186/00	Hose	
14	253/00019/00	Clamp	
15	223/00187/00	Soap Dispenser to Tub Hose	
16	153/00026/01	Assembly Plate Spray	
17	153/00026/02	Inlet Valve Plate	
18	153/00026/06	Inlet Valve Plate	Upper
19	246/00181/00	Rubber Strip	
20	211/00088/00	Cable Tie	
21	211/00104/00	Tie Holder	

© Copyright, Alliance Laundry Systems LLC – DO NOT COPY or TRANSMIT

Supply Dispenser Plumbing - Models with Dhnfoss Valves

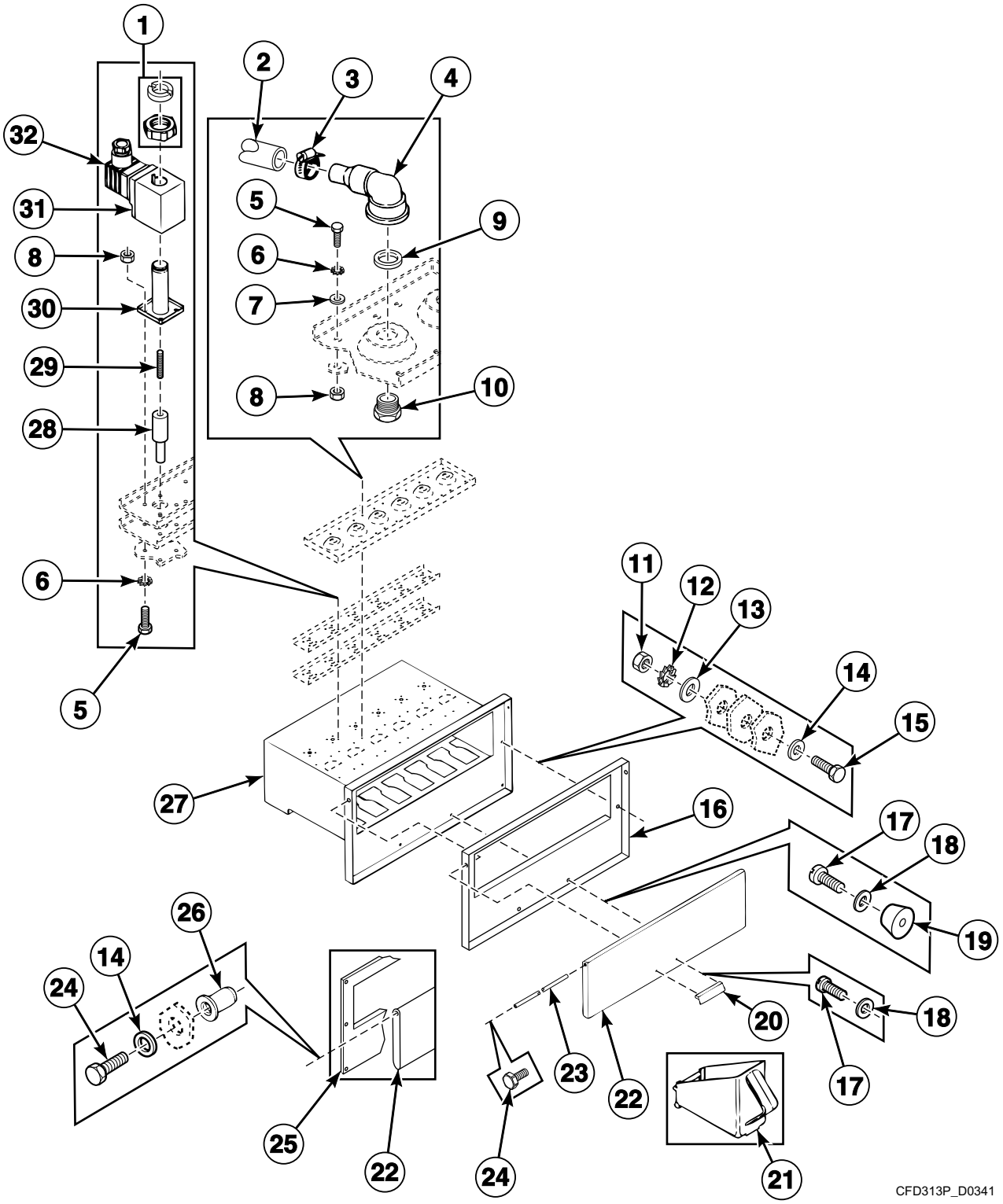

© Copyright, Alliance Laundry Systems LLC – DO NOT COPY or TRANSMIT

Supply Dispenser Plumbing - Models with Dhnfoss Valves

REF	PART NO.	DESCRIPTION	COMMENTS
1	209/01306/00	Nut	
2	223/00044/00	Water Hose	
3	223/00011/00	Hose Clamp	
4	211/10149/00	Flow Nozzle	
5	205/00116/00	Bolt	
6	203/00006/00	Washer	
7	202/00109/00	Washer	
8	204/00105/00	Nut	
9	223/00176/00	O-Ring	
10	211/10147/00	Mounting Piece	
11	204/00106/00	Nut	
12	203/00004/00	Washer	
13	202/00106/00	Washer	
14	202/00101/00	Washer	
15	207/00103/00	Screw	
16	153/00026/24	Front Panel	
17	207/00110/00	Screw	
18	202/00102/00	Washer	
19	223/00008/01	Handle Grommet	
20	223/00008/05	Soap Dispenser Cover Handle	
21	253/00012/00	Soap Dispenser	
22	153/00026/12	Soap Dispenser Cover	
23	153/00026/13	Hinge	
24	205/00107/00	Bolt	
25	153/00026/14	Front Panel	
26	204/00301/00	Bushing	
27	153/00026/99	Soap Dispenser	
28	211/10158/00	Valve Guide	
29	224/00048/00	Spring	
30	209/00306/04	Core Holder	
31	209/00306/02	Coil	
32	209/00306/18	Terminal Connector	

© Copyright, Alliance Laundry Systems LLC – DO NOT COPY or TRANSMIT

Overflow and Inlet Plumbing

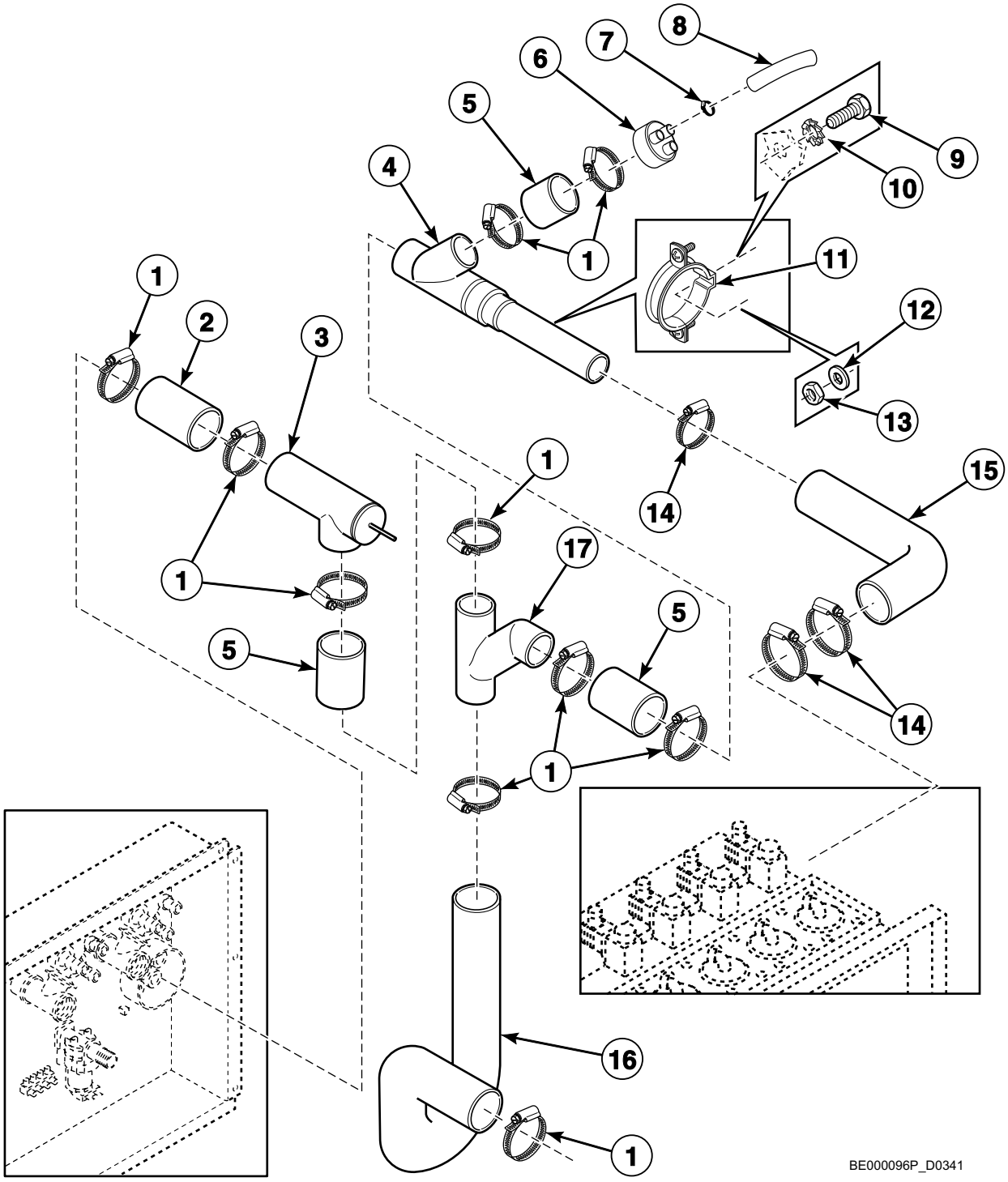

© Copyright, Alliance Laundry Systems LLC – DO NOT COPY or TRANSMIT

Overflow and Inlet Plumbing

REF	PART NO.	DESCRIPTION	COMMENTS
1	223/00071/00	Hose Clamp	
2	223/00219/00	Soap Inlet Hose Kit	
3	253/00029/00	Elbow	
4	253/00021/00	Reducing Tee	
5	223/00141/00	Drain Valve to Drain Pipe Hose	
6	223/00289/00	Water Inlet Grid	
7	223/00011/00	Hose Clamp	
8	223/00059/00	Water Hose	
9	205/00105/00	Bolt	
10	203/00004/00	Washer	
11	253/00019/00	Clamp	
12	202/00110/00	Washer	
13	204/00106/00	Nut	
14	223/00014/00	Hose Clamp	
15	223/00186/00	Hose	
16	223/00187/00	Soap Dispenser to Tub Hose	

© Copyright, Alliance Laundry Systems LLC – DO NOT COPY or TRANSMIT

Supply Dispenser

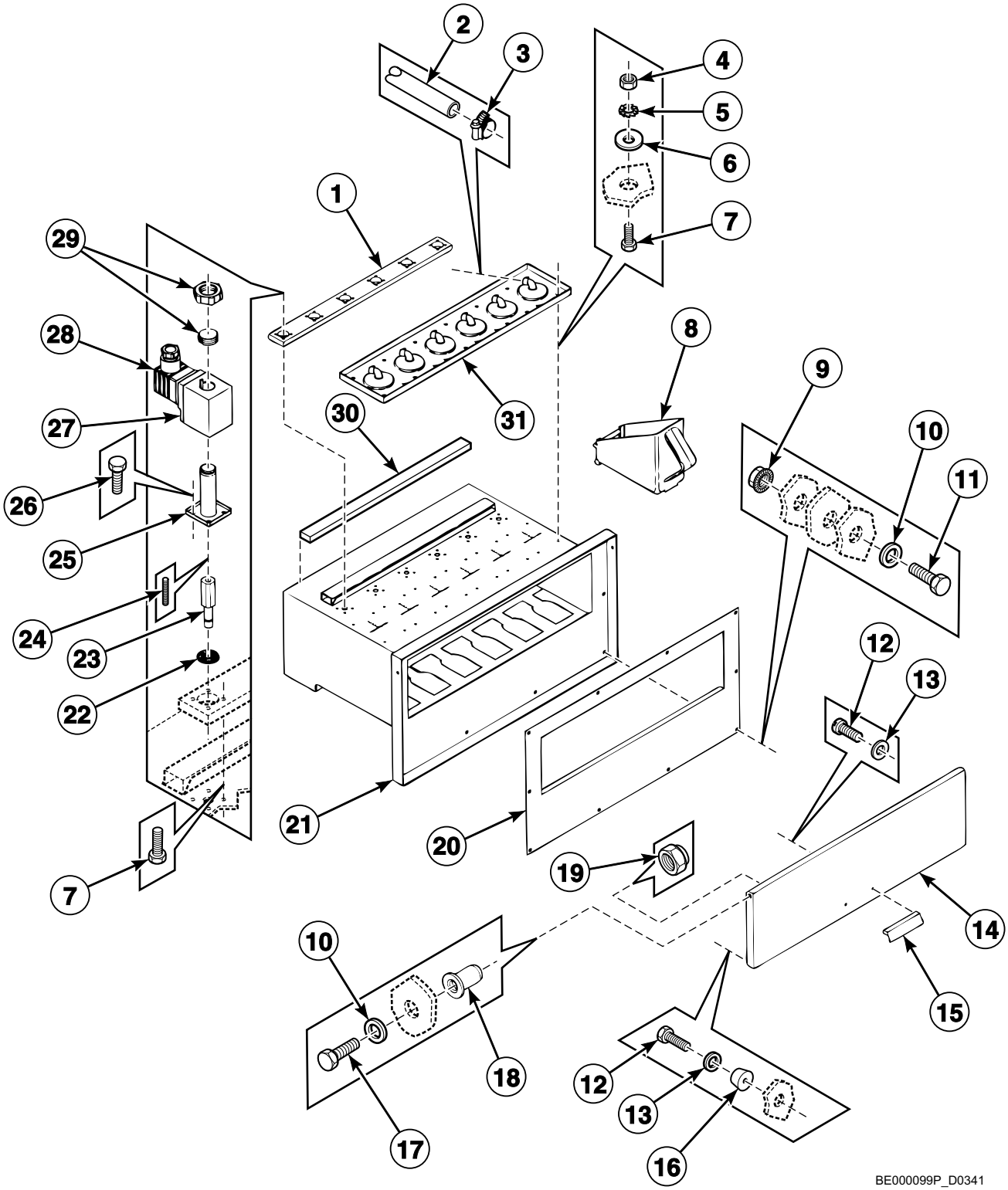

© Copyright, Alliance Laundry Systems LLC – DO NOT COPY or TRANSMIT

Supply Dispenser

REF	PART NO.	DESCRIPTION	COMMENTS
1	253/00027/00	Assembly Plate	
2	223/00044/00	Water Hose	
3	223/00011/00	Hose Clamp	
4	204/00105/00	Nut	
5	203/00006/00	Washer	
6	202/00109/00	Washer	
7	205/00116/00	Bolt	
8	253/00012/00	Soap Dispenser	
9	206/00101/00	Nut	
10	202/00101/00	Washer	
11	205/00105/00	Bolt	
12	207/00110/00	Screw	
13	202/00102/00	Washer	
14	153/00026/12	Soap Dispenser Cover	
15	223/00008/05	Soap Dispenser Cover Handle	
16	223/00008/01	Handle Grommet	
17	207/00126/00	Screw	
18	204/00301/00	Bushing	
19	204/00009/00	Nut	
20	153/00026/14	Front Panel	
21	153/00026/99	Soap Dispenser	
22	223/00208/00	Washer	
23	211/10158/00	Valve Guide	
24	224/00048/00	Spring	
25	209/00306/04	Core Holder	
26	205/00120/00	Bolt	
27	209/00306/02	Coil	
28	209/00306/18	Terminal Connector	
29	209/01306/00	Nut	
30	246/00181/00	Rubber Strip	
31	153/00026/01	Assembly Plate Spray	

© Copyright, Alliance Laundry Systems LLC – DO NOT COPY or TRANSMIT

Liquid Supply Pump - Through Supply Dispenser

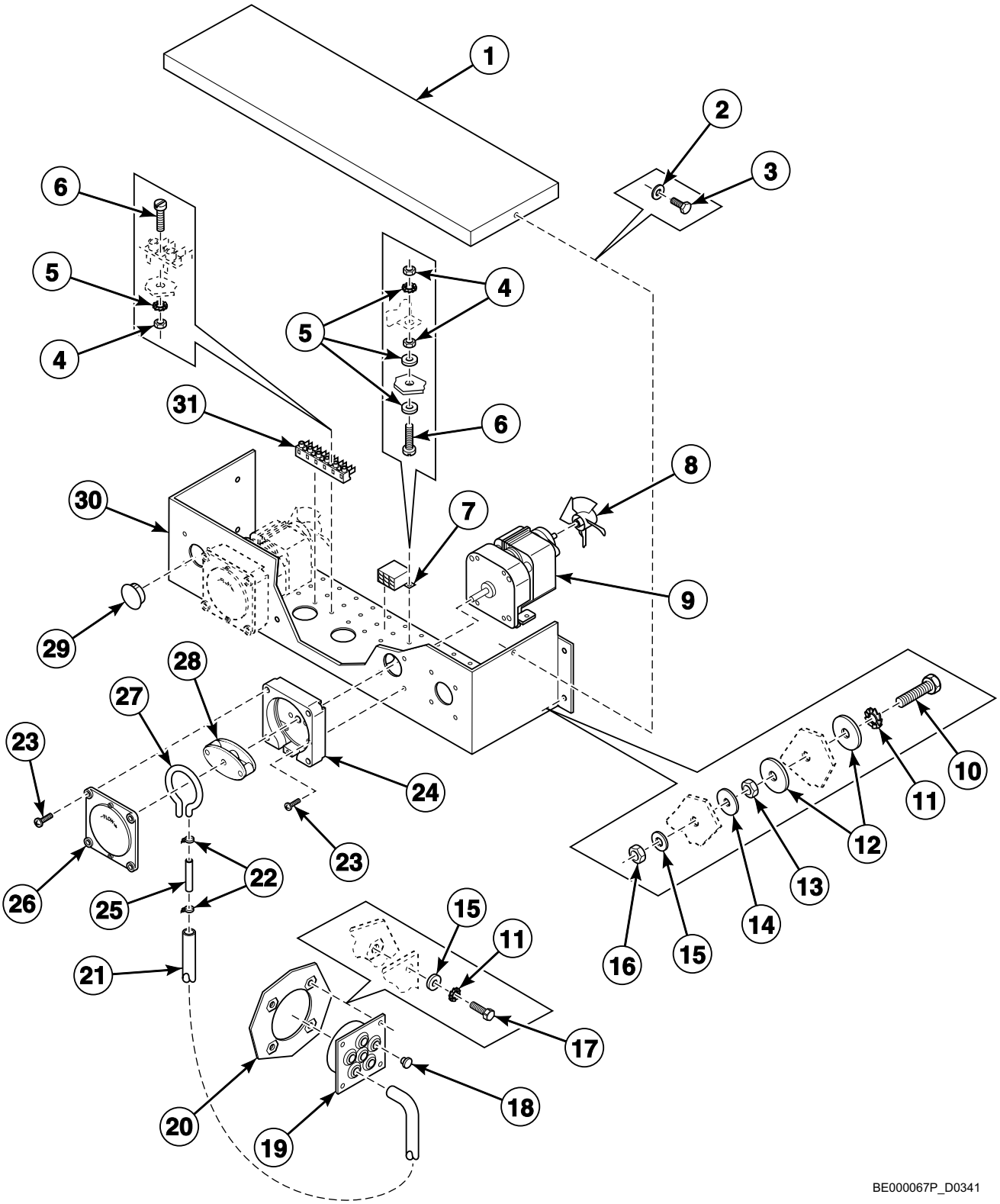

© Copyright, Alliance Laundry Systems LLC – DO NOT COPY or TRANSMIT

Liquid Supply Pump - Through Supply Dispenser

REF	PART NO.	DESCRIPTION	COMMENTS
1	111/00234/01	Pump Flow Top	
2	202/00109/00	Washer	
3	205/00113/00	Bolt	
4	204/00007/00	Nut	
5	203/00006/00	Washer	
6	207/00003/00	Screw	
7	209/00141/00	Plug	
8	209/00420/05	Fan	
9	209/00420/04	Motor	
10	205/00103/00	Bolt	
11	203/00004/00	Washer	
12	202/00108/00	Washer	
13	204/00005/00	Nut	
14	202/00106/00	Washer	
15	202/00101/00	Washer	
16	204/00009/00	Nut	
17	205/00104/00	Bolt	
18	211/00129/00	Plug	
19	153/00043/00	Inlet	
20	225/00019/00	Holder	
21	223/00179/00	Soap Injector Hose	
22	211/00088/00	Cable Tie	
23	209/00420/07	Screw	
24	209/00420/02	Pump Housing	
25	223/00180/00	Soap Injector Hose	
26	209/00420/06	Cover Plate	
27	209/00420/01	Hose	
28	209/00420/03	Pressure Roller	
29	211/00087/00	Plug	
30	111/00234/00	Pump Flow Assembly	
31	210/10007/00	Connection	

© Copyright, Alliance Laundry Systems LLC – DO NOT COPY or TRANSMIT

Liquid Supply Pump - Through Door Glass

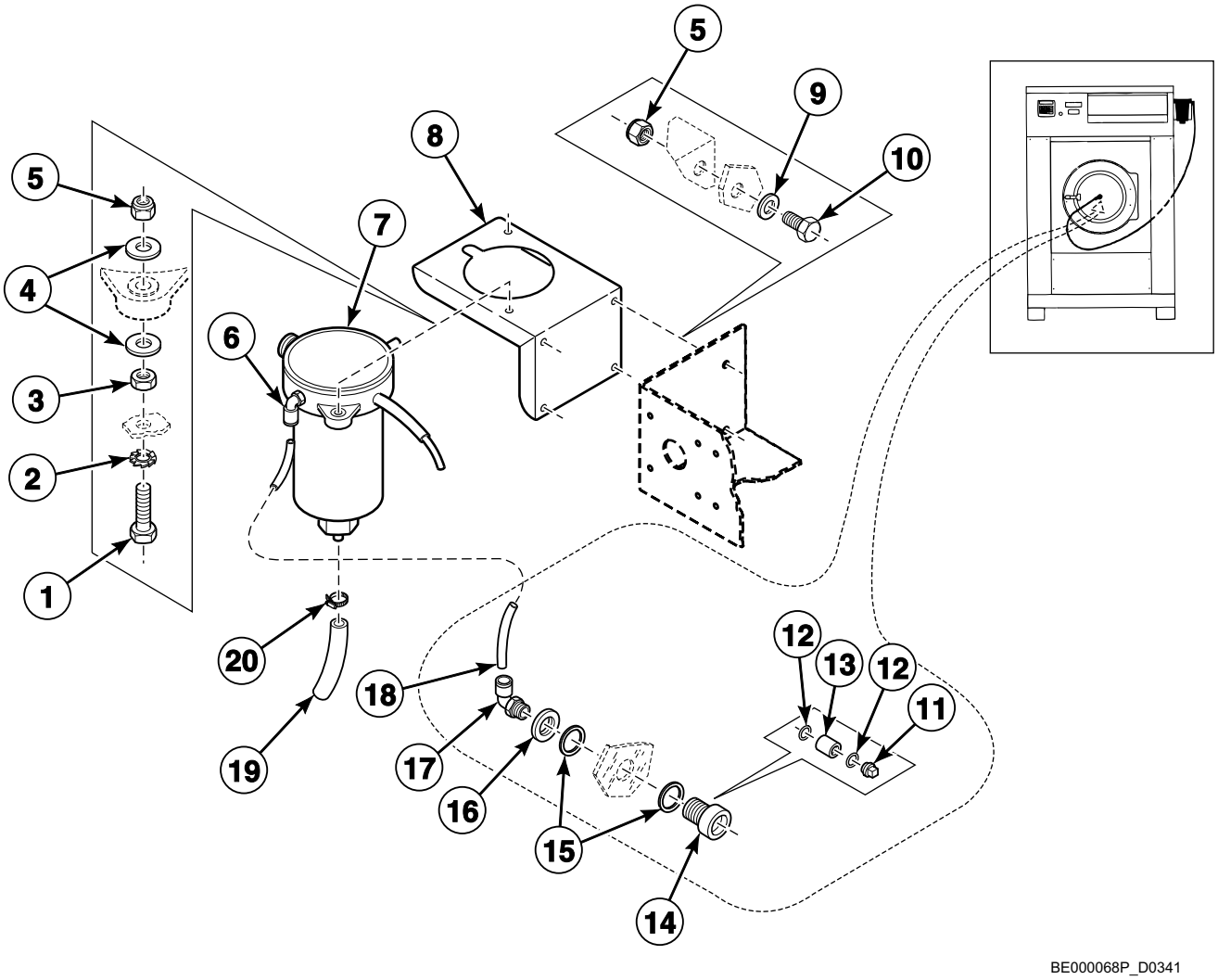

© Copyright, Alliance Laundry Systems LLC – DO NOT COPY or TRANSMIT

Liquid Supply Pump - Through Door Glass

REF	PART NO.	DESCRIPTION	COMMENTS
1	205/00103/00	Bolt	
2	203/00004/00	Washer	
3	204/00106/00	Nut	
4	202/00101/00	Washer	
5	204/00009/00	Nut	
6	223/00181/00	Soap Injector Elbow Coupling	
7	209/00369/00	Liquid Soap Spray Pump	
8	111/10179/00	Spray Pump Mounting Plate	
9	201/00007/00	Washer	
10	205/00107/00	Bolt	
11	223/00178/00	Soap Injector Orifice	
12	223/00177/00	O-Ring	
13	211/00126/00	Soap Injector Orifice Nipple	
14	211/00127/00	Soap Injector Connector	
15	223/00176/00	O-Ring	
16	211/10106/00	Nut	
17	223/00182/00	Soap Injector Coupling	
18	223/00180/00	Soap Injector Hose	
19	223/00179/00	Soap Injector Hose	
20	211/00088/00	Cable Tie	

© Copyright, Alliance Laundry Systems LLC – DO NOT COPY or TRANSMIT

Electric and Steam Heating Options

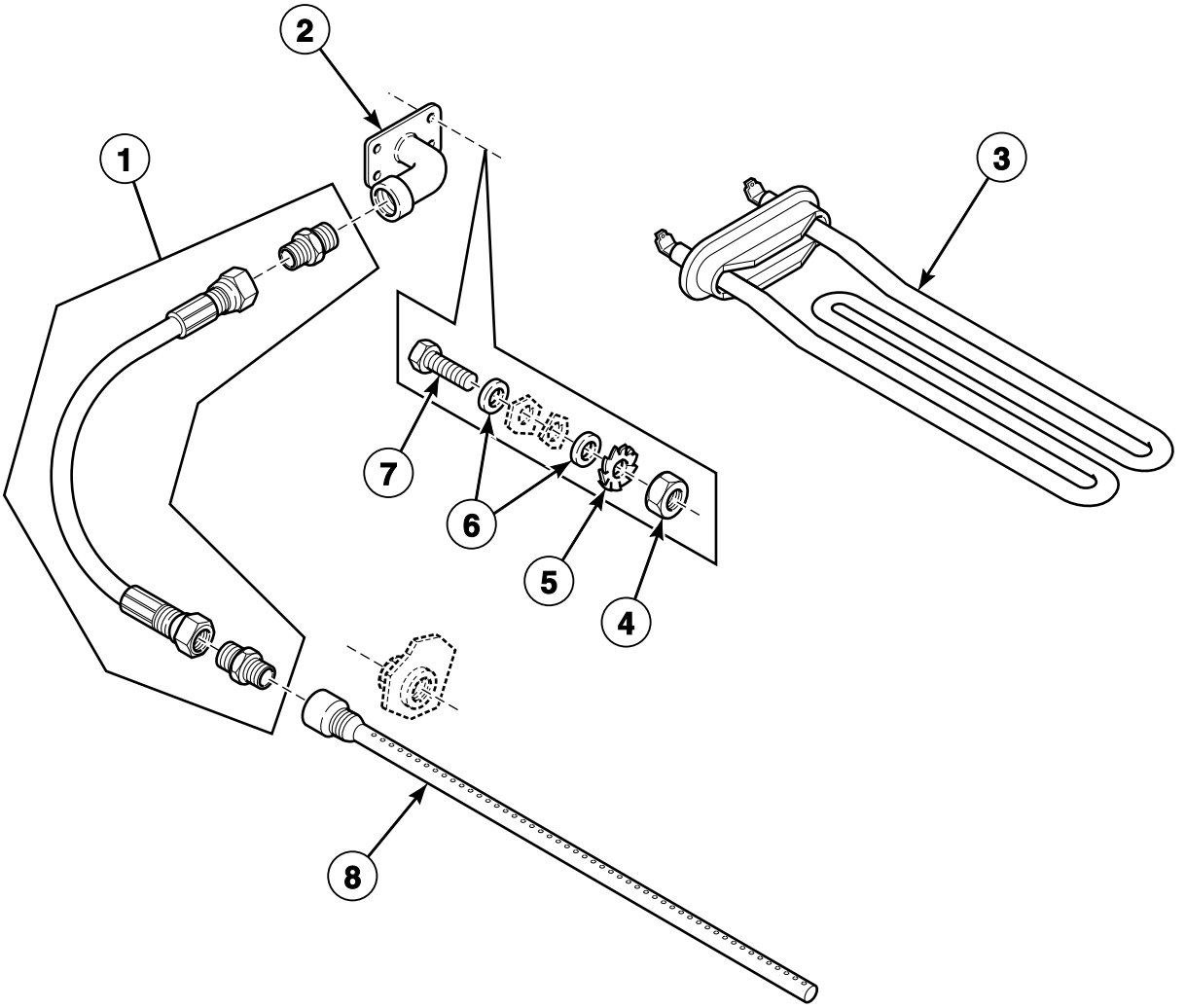

BE000069P_D0341

© Copyright, Alliance Laundry Systems LLC – DO NOT COPY or TRANSMIT

Electric and Steam Heating Options

REF	PART NO.	DESCRIPTION	COMMENTS
1	217/00026/00	Steam Hose	
2	153/00047/00	Steam Connection Inlet	
3	209/00049/00	Heating Element	3000W; 220/240 Volt
	209/00581/00	Heating Element	4000W; 380 Volt
4	204/00106/00	Nut	
5	203/00004/00	Washer	
6	202/00106/00	Washer	
7	205/00105/00	Bolt	
8	153/00048/00	Steam Injector	

© Copyright, Alliance Laundry Systems LLC – DO NOT COPY or TRANSMIT

Balance Switch

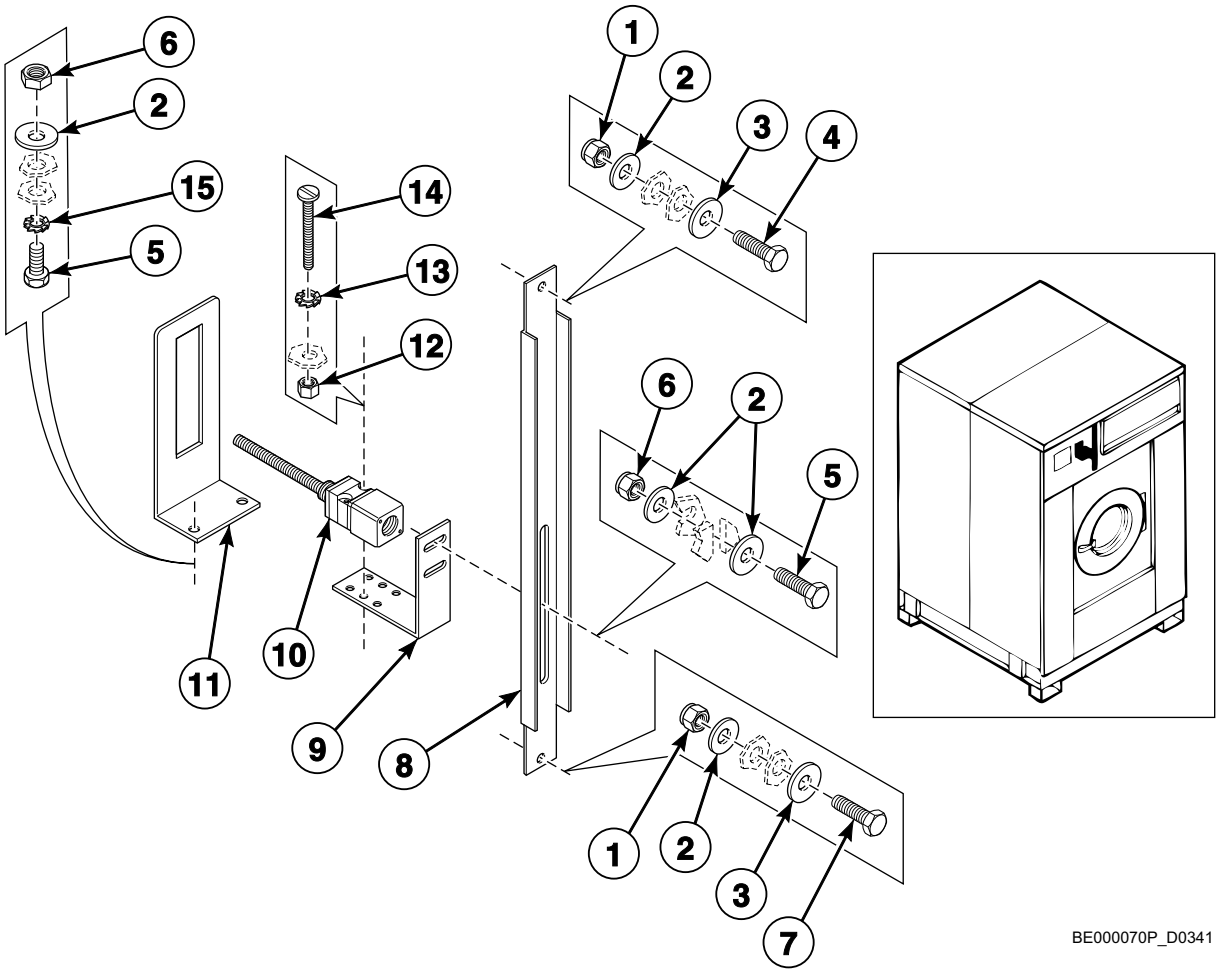

© Copyright, Alliance Laundry Systems LLC – DO NOT COPY or TRANSMIT

Balance Switch

REF	PART NO.	DESCRIPTION	COMMENTS
1	204/00009/00	Nut	
2	202/00106/00	Washer	
3	202/00101/00	Washer	
4	205/00107/00	Bolt	
5	205/00104/00	Bolt	
6	204/00106/00	Nut	
7	207/00111/00	Screw	
8	153/00045/00	Out-of-Balance Switch Plate	
9	111/00107/00	Tilt Switch Bracket	
10	209/00255/00	Out-of-Balance Switch	
11	153/00046/00	Out-of-Balance Detector Plate	
12	204/00105/00	Nut	
13	206/00006/00	Bolt	
14	207/00018/00	Screw	
15	203/00004/00	Washer	

© Copyright, Alliance Laundry Systems LLC – DO NOT COPY or TRANSMIT

Notes

© Copyright, Alliance Laundry Systems LLC – DO NOT COPY or TRANSMIT

Parts Index

A

Assembly Plate
153/00111/00 ..... 33, 35
153/00111/02 37
153/00112/00 ..... 33, 35
253/00027/00 59

Assembly Plate Spray
153/00026/01 ..... 53, 59

B

Back Panel
153/00014/00 9

Back Panel Support Assembly
153/00114/B0 43
153/00114/C0 43

Backbridge
153/00027/00 ..... 43, 45
153/00027/01 ..... 47, 49

Ball Bearing
212/00004/00 11

Bearing
253/00007/00 ..... 11, 13

Bearing Cover Plate
153/00041/00 11

Bearing Housing
253/00002/00 ..... 9, 11

Bolt
205/00102/00 9
205/00103/00 ..... 49, 61, 63
205/00104/00 ..... 11, 27, 41, 43, 45, 47, 61, 67
205/00105/00 ..... 9, 35, 41, 43, 57, 59, 65
205/00107/00 ..... 55, 63, 67
205/00113/00 61
205/00116/00 ..... 55, 59
205/00120/00 59
206/00004/00 ..... 13, 15
206/00006/00 ..... 11, 67
206/00009/00 ..... 17, 19
206/00027/00 ..... 39, 45, 49
206/00042/00 41
206/00045/00 7
206/00070/00 7
206/00072/00 15
206/00099/00 ..... 33, 35, 37
206/00122/00 ..... 9, 15
206/00136/00 47
212/00009/02 13
224/00046/00 7
248/00114/00 15

Bushing
204/00301/00 ..... 55, 59

Button
209/00099/09 31

C

Cable Duct
225/00027/00 33

Cable Tie
211/00088/00 ..... 45, 47, 53, 61, 63

Cerclips
253/00008/00 11

Clamp
209/00317/01 ..... 37, 39
209/00317/02 ..... 37, 39
209/00317/04 ..... 37, 39
209/00318/01 ..... 37, 39
209/00318/02 ..... 37, 39
209/00319/00 ..... 37, 39
253/00019/00 ..... 53, 57

Coil
209/00051/21 ..... 21, 23
209/00052/21 ..... 21, 23
209/00203/21 21
209/00212/11 23
209/00306/02 ..... 55, 59

Connection
210/10007/00 61

Connector
223/00121/00 ..... 45, 49

Contact
209/00099/05 31

Contact Switch
209/00099/06 31

Contactor
209/00124/00 ..... 33, 35
209/00148/02 ..... 33, 35

Cooling Fan
209/00287/00 ..... 15, 47

Cordlock
211/00097/00 47
211/00097/01 47
211/00117/00 47
211/00118/00 47

Core Holder
209/00306/04 ..... 55, 59

Counter Ring
232/00008/00 13

Counterweight
153/00004/00 9

Cover Plate
140/00010/00 ..... 45, 49
209/00420/06 ..... 45, 47, 61

D

Diaphragm
209/00138/01 51

Diaphragm Spring
209/00090/19 51

Door
118/00125/00 27

N/A items do not appear in index.

© Copyright, Alliance Laundry Systems LLC – DO NOT COPY or TRANSMIT

Door Axle Roller
217/00013/05 29
Door Circlip
217/00013/11 29
Door Glass
B12449801 27
Door Glass Seal
223/00068/00 27
Door Handle
217/00013/12 29
217/00051/00 ..... 27, 29
Door Handle Assembly Plate
217/00013/16 29
Door Handle Hook
217/00013/13 29
Door Handle Latch
217/00013/04 29
Door Handle Locking Pin
217/00013/15 29
Door Handle Spring
217/00013/14 29
Door Handle Stop
217/00016/00 27
Door Hinge Block
253/00022/00 27
Door Hinge Spacer
117/00010/00 27
Door Latch Cord
224/00015/00 25
Door Lock Assembly
217/00052/01 25
Door Lock Board
209/00275/04 ..... 25, 33, 35
Door Lock Microswitch
209/00272/00 25
Door Lock Pin Kit
211/00109/00 27
217/00052/02 25
Door Lock Solenoid
209/00274/00 25
Door Lock Spacer
217/00052/03 25
Door Lock Spring
217/00013/03 29
224/00049/00 25
Door Locking Grip
217/00013/07 29
Door Locking Pin
217/00013/08 29
Door Mounting Pin
217/00013/09 29
Door Roller
217/00013/06 29
Drain Hose
223/00183/00 53
Drain Pipe
223/00106/00 ..... 17, 19
Drain Tub to Drain Valve Hose
223/00133/00 17
Drain Valve
209/00075/00 ..... 17, 19
209/00075/05 ..... 21, 23
209/00171/00 17
Drain Valve Handle
209/00115/11 23
Drain Valve Motor
209/00051/11 21
209/00052/11 21
209/00052/12 23
209/00203/11 21
209/00203/12 23
Drain Valve Motor Assembly
209/00170/06 23
Drain Valve Motor Mounting Plate
209/00025/07 21
209/00115/04 23
Drain Valve Overflow Plug
223/00086/00 ..... 17, 19
Drain Valve Plate Assembly
115/00147/00 ..... 17, 19
115/00147/01 17
Drain Valve Shaft
209/00170/10 ..... 21, 23
Drain Valve Shaft Seal
209/00025/10 ..... 21, 23
Drain Valve Spring
209/00025/13 21
209/00170/02 23
Drain Valve to Drain Pipe Hose
223/00141/00 ..... 17, 19, 57
Drum and Axle
153/00035/00 13
153/00036/00 13

E

Elbow
253/00029/00 57
Exhaust Valve Hose
223/00170/00 19
Extension Piece
711/00058/00 ..... 45, 49

F

Fan
209/00420/05 ..... 45, 47, 61
227/00120/01 37
227/00120/02 37
Fan Cover
153/00027/02 47
Fan Grill
209/00465/01 47
Filter
223/00060/00 51
Flow Nozzle
211/10149/00 55
Frame
153/00009/00 7
153/00010/00 7
Front Cabinet Top
153/00033/01 41
153/00034/01 41
Front Panel
153/00013/00 9

N/A items do not appear in index.

© Copyright, Alliance Laundry Systems LLC – DO NOT COPY or TRANSMIT

153/00026/14 ..... 55, 59
153/00026/24 55
153/00107/00 ..... 31, 41
153/00109/00 41
153/00110/00 41

Front Panel Plate
153/00101/00 9

Fuse
209/00195/00 39
209/00468/00 39

Fuse Holder
209/00202/00 ..... 37, 39

G

Gasket
246/00092/00 ..... 9, 33, 35
246/00149/00 ..... 33, 35, 41

Grease Ring
253/00009/00 11

Grommet
223/00174/00 ..... 35, 47
223/00198/00 ..... 35, 39

Ground Terminal
210/10015/00 25

H

Handle Grommet
223/00008/01 ..... 55, 59

Heating Element
209/00049/00 65
209/00581/00 65

Hinge
131/00046/00 27
153/00026/13 55

Holder
225/00019/00 ..... 33, 45, 61

Hose
209/00420/01 ..... 45, 47, 61
223/00185/00 45
223/00186/00 ..... 53, 57

Hose Barb
223/00016/00 ..... 33, 35

Hose Clamp
223/00010/00 ..... 45, 49
223/00011/00 ..... 33, 35, 45, 49, 53, 55, 57, 59
223/00012/00 ..... 17, 19
223/00013/00 ..... 17, 19
223/00014/00 ..... 45, 53, 57
223/00071/00 ..... 17, 19, 49, 53, 57

Hose Tee
223/00035/01 ..... 33, 35

Hose Vent
223/00102/07 ..... 45, 49

I

Inlet
153/00043/00 ..... 45, 47, 53, 61

Inlet Valve
209/00137/00 ..... 45, 49
209/00138/02 51

Inlet Valve Plate
153/00026/02 53
153/00026/06 53
209/00137/04 51

Inlet Valve Solenoid
209/00090/01 51

Inlet Valve, 3-Way
209/00277/00 ..... 45, 49

Interlock Coil Spring
224/00043/00 25

Interlock Lever
217/00052/04 25

Inverter
227/00120/00 37
227/00130/00 49
227/00131/00 49

Inverter Box
153/00111/03 37

Inverter Top
153/00111/04 37

K

Key
212/00026/00 13

Keyboard
209/00323/01 31

L

Label
229/00245/00 31
229/00250/00 ..... 45, 49

Level Switch Elbow
223/00015/00 33

Leveling Leg
252/00006/00 9

Lever Spring
224/00040/00 25

Light Microswitch
209/00273/00 25

Liquid Soap Spray Pump
209/00369/00 63

Lock Shaft
217/00017/03 25

Lower Front Panel
153/00113/00 41

Lubricator
212/00002/00 11

M

Motor
B12511401 15
209/00420/04 ..... 45, 47, 61
227/00132/00 15

Motor Plate
153/00024/00 15

N/A items do not appear in index.

© Copyright, Alliance Laundry Systems LLC – DO NOT COPY or TRANSMIT

153/00025/00 15
Mounting Piece
211/10147/00 55
Mounting Plate
173/00012/00 31

N

Nut
204/00001/00 7
204/00003/00 9
204/00004/00 ..... 17, 19
204/00005/00 61
204/00007/00 .... 15, 25, 33, 35, 37, 39, 45, 47, 49, 61
204/00008/00 ..... 25, 31, 37
204/00009/00 ..... 43, 49, 59, 61, 63, 67
204/00012/00 ..... 7, 15
204/00016/00 7
204/00019/00 7
204/00103/00 27
204/00105/00 ..... 55, 59, 67
204/00106/00 ..... 27, 37, 41, 43, 55, 57, 63, 65, 67
204/00109/00 41
204/00112/00 7
204/00113/00 ..... 7, 9, 15
204/00114/00 ..... 15, 47
204/00116/00 ..... 31, 35
206/00101/00 ..... 35, 49, 59
208/00002/00 37
209/01306/00 ..... 55, 59
211/00022/00 45
211/00022/01 45
211/10106/00 63

O

O-Ring
217/00021/00 ..... 25, 27
223/00042/00 ..... 45, 49
223/00176/00 ..... 55, 63
223/00177/00 63
231/00036/00 11
Outlet Pipe Plate Assembly
101/00007/00 43
Out-of-Balance Detector Plate
153/00046/00 67
Out-of-Balance Switch
209/00255/00 67
Out-of-Balance Switch Plate
153/00045/00 67
Overflow Hose
223/00184/00 ..... 17, 19

P

Pipe
153/00005/00 13
Plug
209/00141/00 ..... 33, 61
211/00084/00 45
211/00087/00 ..... 45, 47, 61
211/00129/00 ..... 45, 47, 61
Pressure Hose
223/00082/00 33
Pressure Roller
209/00420/03 ..... 45, 47, 61
Pressure Switch
209/00007/50 ..... 33, 35
Pressure Switch Elbow
223/00210/00 35
Pressure Switch Hose
223/00212/00 35
Printboard
209/00218/01 ..... 37, 39
209/00323/02 ..... 33, 35
Programming Switch
209/00326/00 31
Pulley
226/00090/00 13
253/00013/00 15
253/00024/00 15
253/00026/01 13
Pulley Hub
212/00009/01 13
Pump Flow Assembly
111/00234/00 61
Pump Flow Top
111/00234/01 61
Pump Housing
209/00420/02 ..... 45, 47, 61

R

Rail
720/00110/01 ..... 37, 39
Rear Cabinet Top
153/00033/02 41
153/00034/02 41
Reducing Tee
253/00021/00 ..... 53, 57
Rubber Strip
246/00181/00 ..... 53, 59

S

Screw
206/00031/00 15
206/00125/00 9
207/00003/00 ..... 15, 33, 35, 61
207/00008/00 ..... 35, 39
207/00009/00 25
207/00014/00 37
207/00018/00 67
207/00020/00 27
207/00025/00 31
207/00031/00 39
207/00101/00 41
207/00102/00 25
207/00103/00 ..... 25, 55
207/00105/00 ..... 47, 49
207/00108/00 31
207/00110/00 ..... 13, 45, 49, 55, 59
207/00111/00 ..... 53, 67
207/00123/00 41
207/00126/00 ..... 27, 59

N/A items do not appear in index.

© Copyright, Alliance Laundry Systems LLC – DO NOT COPY or TRANSMIT

207/00135/00 ..... 25, 35
208/00001/00 37
209/00025/08 ..... 21, 23
209/00090/03 51
209/00170/05 ..... 21, 23
209/00170/07 ..... 21, 23
209/00420/07 ..... 45, 47, 61
227/00120/03 37

Seal Cover Plate
131/00035/00 11

Separator
206/00141/00 35

Shaft Seal
231/00037/00 11

Shock Absorber
247/00008/00 7

Side Panel
153/00103/00 ..... 41, 43
153/00104/00 ..... 41, 43
153/00105/00 ..... 41, 43
153/00106/00 ..... 41, 43

Side Panel Gasket
246/00079/00 43

Side Panel Support Assembly
153/00103/01 43

Soap Dispenser
153/00026/99 ..... 55, 59
253/00012/00 ..... 55, 59

Soap Dispenser Cover
153/00026/12 ..... 55, 59

Soap Dispenser Cover Handle
223/00008/05 ..... 55, 59

Soap Dispenser to Tub Hose
223/00187/00 ..... 53, 57

Soap Injector Connector
211/00127/00 63

Soap Injector Coupling
223/00182/00 63

Soap Injector Elbow Coupling
223/00181/00 63

Soap Injector Hose
223/00179/00 ..... 45, 47, 61, 63
223/00180/00 ..... 45, 47, 61, 63

Soap Injector Orifice
223/00178/00 63

Soap Injector Orifice Nipple
211/00126/00 63

Soap Inlet Hose Kit
223/00219/00 57

Spray Pump Mounting Plate
111/10179/00 63

Spring
209/00090/02 51
209/00138/03 51
209/00138/05 51
224/00048/00 ..... 55, 59

Standoff
211/00120/00 ..... 25, 33, 35, 37, 39

Steam Connection Inlet
153/00047/00 65

Steam Hose
217/00026/00 65

Steam Injector
153/00048/00 65

Suspension Spring
B12456301 7

Switch Lever
217/00052/05 25

T

Terminal
209/00006/00 ..... 37, 39
209/00057/00 37

Terminal Block
209/00005/00 ..... 33, 35, 49
209/00058/00 ..... 37, 39

Terminal Connector
209/00306/18 ..... 55, 59

Thermostat
209/00266/08 ..... 33, 35

Thermostat Seal
225/10004/00 ..... 33, 35

Tie Holder
211/00104/00 53

Tilt Switch Bracket
111/00107/00 67

Top Cover Plate
153/00111/01 ..... 33, 35
153/00112/01 ..... 33, 35

T-Piece
223/00043/00 ..... 45, 49
253/00020/00 53
253/00028/00 19

Tub
153/00019/00 9
153/00020/00 9

Tub Gasket
223/00168/00 9

Tub Support
153/00011/00 7
153/00012/00 7
153/00022/00 9
153/00023/00 9

U

Upper Back Panel
153/00114/AO 43

V

Valve
209/00137/02 51

Valve Guide
211/10158/00 ..... 55, 59

Valve Plate
209/00137/03 51

V-Belt
226/00116/00 13
253/00010/00 13

Vent Hose
223/00211/00 49

N/A items do not appear in index.

© Copyright, Alliance Laundry Systems LLC – DO NOT COPY or TRANSMIT

W

Washer
- 201/00001/00 ..... 7, 15
- 201/00007/00 ..... 35, 37, 63
- 201/00008/00 ..... 15, 31
- 201/00010/00 ..... 17, 19
- 201/00011/00 ..... 13, 15
- 201/00013/00 7
- 201/00017/00 25
- 201/00018/00 25
- 201/00202/00 11
- 202/00002/00 ..... 17, 19
- 202/00004/00 ..... 31, 45, 47, 49
- 202/00101/00 .... 27, 45, 47, 49, 53, 55, 59, 61, 63, 67
- 202/00102/00 ..... 45, 49, 55, 59
- 202/00104/00 27
- 202/00105/00 9
- 202/00106/00 ..... 41, 43, 55, 61, 65, 67
- 202/00108/00 ..... 27, 61
- 202/00109/00 ..... 55, 59, 61
- 202/00110/00 ..... 9, 43, 47, 57
- 202/00111/00 41
- 203/00001/00 ..... 13, 15
- 203/00002/00 11
- 203/00003/00 ..... 17, 19
- 203/00004/00 ..... 35, 41, 43, 45, 49, 53, 55, 57, 61, 63, 65, 67
- 203/00005/00 37
- 203/00006/00 ..... 25, 33, 35, 37, 39, 45, 47, 49, 55, 59, 61
- 203/00007/00 ..... 25, 31, 35, 37
- 203/00008/00 27
- 203/00010/00 25
- 203/00011/00 27
- 208/00009/00 41
- 209/00025/12 23
- 209/00170/09 21
- 217/00052/08 25
- 223/00051/10 31
- 223/00123/00 ..... 31, 35
- 223/00208/00 59

Water Hose
- 223/00044/00 ..... 45, 49, 55, 59
- 223/00059/00 ..... 45, 49, 53, 57

Water Inlet Grid
- 223/00289/00 ..... 53, 57

N/A items do not appear in index.

© Copyright, Alliance Laundry Systems LLC – DO NOT COPY or TRANSMIT